langir®

Anti vandal switch

www.langir.com

Anti-vandal series comparison

	Cutout Diameter / Depth	Functions available	Terminal type	Actuator options	Material Options: Nickel plated brass	Material Options: Gold plated brass	Material Options: Stainless steel	Material Options: Anodized aluminum	Illum. Options: Dot illumination	Illum. Options: Ring illumination	Illum. Options: Bi-Color illumination	Water resistant (IP65 Min.)	RoHS compliant
V19 **Vs19** **short body**	Diameter: 19mm Max. Depth: 10mm	1 Pole: Off-(On) On-(Off)	Screw Solder	High Flat Domed	●	●	●	●			●	●
V16	Diameter: 16mm Max. Depth: 6mm	1 Pole: Off-(On) On-(Off)	Screw Solder	High Flat Domed	●	●	●	●			●	●
L16	Diameter: 16mm Max. Depth: 10mm	1 Pole: On-On On-(On) 2 Pole: On-On On-(On)	Solder	High Flat Concave Guarded	●	●	●	●	●	●	●	●	●
L19 **L19A** **Ls19** **L19M** **Micro trip** **L19B** **High current** **L19Y** **High current for Marine**	Diameter: 19mm Max. current 21A Max. Depth: 10mm	1 Pole: On-On On-(On) 2 Pole: On-On On-(On) 1P Off-(On) + 1P On-(Off)	Screw Solder	Flat				●	●	●	●	●	●	●
V22	Diameter: 22mm Max. Depth: 10mm	1 Pole: Off-(On) On-(Off)	Screw Solder	High Flat Domed	●	●	●	●				●	●
V12	Diameter: 12mm Max. Depth: 6mm	1 Pole: Off-(On)	Screw Solder	Domed High	●		●	●				●	●
Ls16	Diameter: 16mm Max. Depth: 9mm	1 Pole: Off-(On)	Solder	Flat	●		●		●	●	●	●	●
L22 **L22A** **L22B** **High current** **L22M** **Micro-trip**	Diameter: 22mm Max. current 21A Max. Depth: 10mm	2 Pole: 1P Off-(On) + 1P On-(Off)	Screw Solder	Flat			●		●	●	●	●	●
L25	Diameter: 25mm Max. Depth: 12mm	2 Pole: 1P Off-(On) + 1P On-(Off) 4 Pole: 2P Off-(On) + 2P On-(Off)	Solder	Flat			●		●	●	●	●	●

langir®
Anti vandal switch
www.langir.com

Anti vandal switch

Degree of protection to EN60529/DIN 0470

IP X X
- Table I
- Table II

IP Ratings Guide

The IP classification system designates the degree of protection provided by an enclosure against solid objects or water ingress. Table shows degrees of protection against solid objects. Table II shows degrees of protection against water.

Ex) IK 08
- Protection Class
- Mechanical Impact Resistance

Table I (1st characteristic numeral)
Degree of Protection against solid objects

Digit	
0	Non-protected
1	Protected against a solid object greater than 50mm, such as a hand.
2	Protected against a solid object greater than 12.5mm, such as a finger.
3	Protected against a solid object greater than 2.5mm, such as wire or a tool.
4	Protected against a solid object greater than 1.0mm, such as wire or thin strips.
5	Dust-protected. Prevents ingress of dust sufficient to cause harm.
6	Dust tight. No ingress of dust.

Table II (2nd characteristic numeral)
Degree of Protection against water

Digit	
0	Non-protected
1	Protected against dripping water.
2	Protected against dripping water when tilted up to15°.
3	Protected against spraying water at an angle of up to 60°.
4	Protected against splashing water from any direction.
5	Protected against jets of water from any direction.
6	Protected against heavy seas or powerful jets of water. Prevents ingress sufficient to cause harm.
7	Protected against the effects of temporary immersion in water.
8	Protected against the effects of continuous immersion in water.

IK CODE	MECHANICAL IMPACT RESISTANCE
00	Unprotected
01	200g 7.5cm — Impact = 0.15 joule
02	200g 10cm — Impact = 0.20 joule
03	200g 17.5cm — Impact = 0.35 joule
04	200g 25cm — Impact = 0.50 joule
05	200g 35cm — Impact = 0.70 joule
06	500g 20cm — Impact = 1 joule
07	500g 40cm — Impact = 2 joule
08	1.7kg 29.5cm — Impact = 5 joule
09	5kg 20cm — Impact = 10 joule
10	5kg 40cm — Impact = 20 joule

Non-Illuminated

RoHS COMPLIANCE

Anti vandal switch ∅12mm

- **Anti-Vandal IK09/ Sealed IP65**
- **1,000,000 Cycles Momentary**
- **Variety Of Colors**

Order Code

Series		Actuator Options	Terminal Options	Function Options	Material Options	Actuator Color Options
☐	☐	☐	☐	☐	☐	☐
V12		B- Round	P- Solder lug(2.0x0.5) NONE- Screw	NONE- Momentary 1NO	S- Stainless steel N- Nickel plated brass A- Zin-Al alloy black color	W- White Y- Yellow B- Blue G- Green R- Red BK- Black

Description

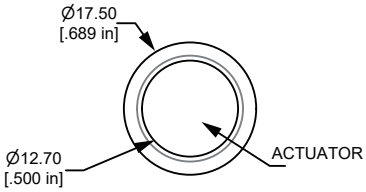

Panel Thickness: 1~4.0mm

Technical Data

Type	V12-B-S	V12-B-N	V12-B-A
Illuminated Options	Non-illuminated		
Front Shape	Round		
Terminal	Screw/ Solder (2.0X0.5)		
Max. Switch Rating	2A 48VDC		
Contact Resistance	≤50mΩ		
Insulation Resistance	≥1000mΩ		
Dielectric Strength	2000VAC		
Operation Temp.	-20℃ ～+55℃		
Mechanical Life	1,000,000 Cycles		
Electrical Life	200,000 Cycles		
Contact Material	Silver Alloy		
Torque	5～14Nm		
Operation Pressure	approx. 5N		
Protection	IP65/ IK08		
Material			
Actuator	Stainless Steel/ Brass/ PBT		
Body	Stainless Steel	Nickel plated brass	Zin-Al Alloy
Base	PBT		
Color	R G Y O B W BK		

Applications / Markets

Yacht Controls

Security Devices

Industrial Controls

Kiosks

Electrical Housewares

Medical Equipment

Parking

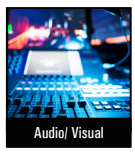
Audio/ Visual

Kitchen

Car Controls

Anti vandal switch ∅12mm

Solder Terminal

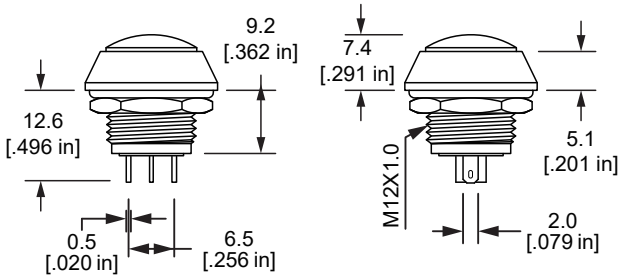

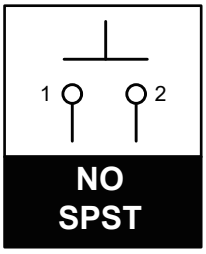

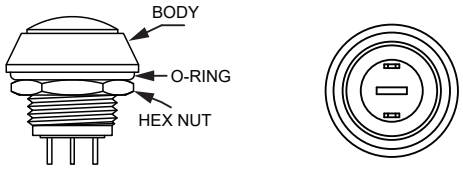

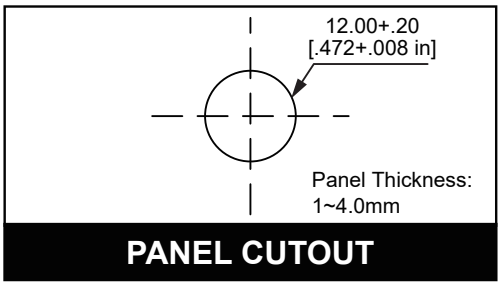

Screw Terminal

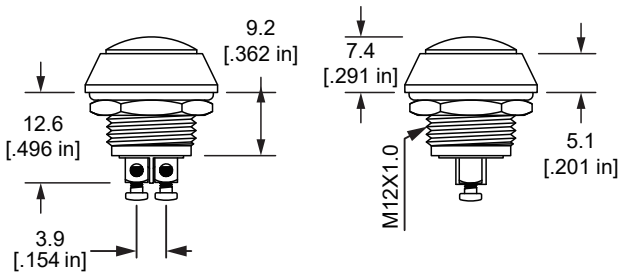

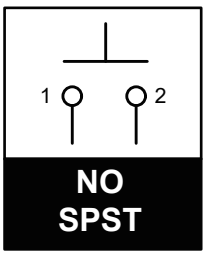

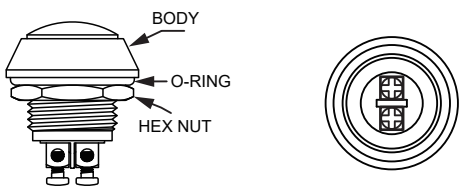

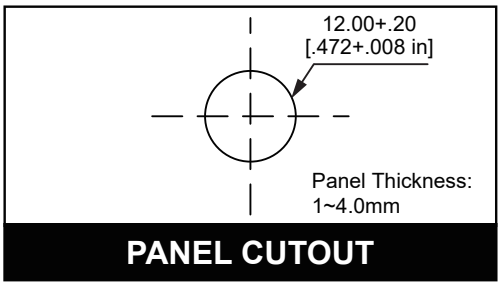

RoHS COMPLIANCE

Anti vandal switch ∅16mm

Applications / Markets

Yacht Controls

Security Devices

Industrial Controls

Kiosks

Electrical Housewares

Medical Equipment

Parking

Audio/ Visual

Kitchen

Car Controls

Order Code

Series	Actuator Options	Terminal Options	Function Options	Material Options		Graphic Options
V16	F- Flat H- High B- Domed	P- Solder lug (2.8x0.5) NONE- Screw	Momentary 1- NO 2- NC	S- Stainless steel N- Nickel plated brass A- Anodized aluminum G- Gold plated brass	–	NONE- Non-marking LE- Laser etched

Description

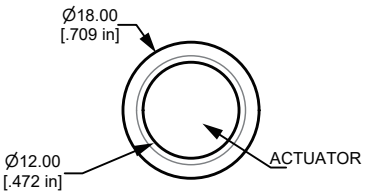

Panel Thickness: 1~6mm

Technical Data

Type	V16-F	V16-B	V16-H
Actuator Options	Flat Actuator	Domed Actuator	High Actuator
Terminal	Screw/ Solder (2.8X0.5)		
Max.Switch Rating	2A 48VDC		
Contact Resistance	≤50mΩ		
Insulation Resistance	≥1000mΩ		
Dielectric Strength	2000VAC		
Operation Temp	-20℃ ～+55℃		
Mechanical Life	1,000,000 Cycles		
Electrical Life	200,000 Cycles		
Contact Material	Silver Alloy		
Torque	5～14Nm		
Operation Pressure	approx. 4N		
Protection	IP65/ IK08		
Material			
Actuator	Stainless steel/ Gold or Nickel plated brass/ Anodized aluminum		
Body	Stainless steel/ Gold or Nickel plated brass/ Anodized aluminum		
Base	PBT		

Actuator Options

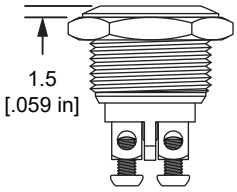

Flat Actuator

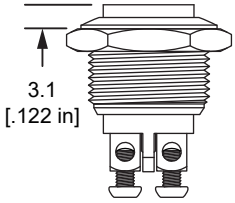

High Actuator

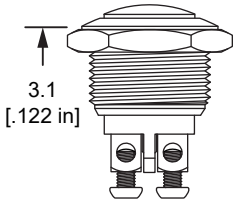

Domed Actuator

Anti vandal switch ∅16mm

Solder Terminal

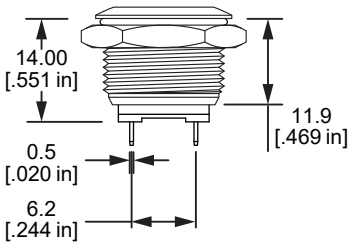

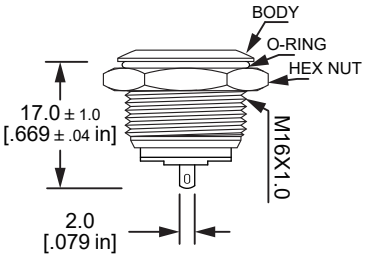

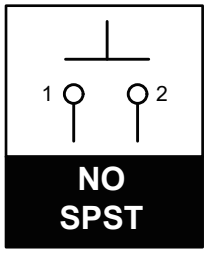

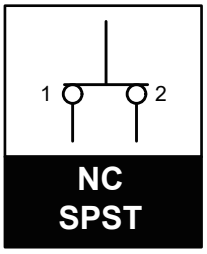

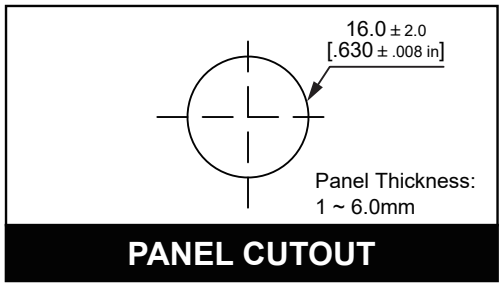

Screw Terminal

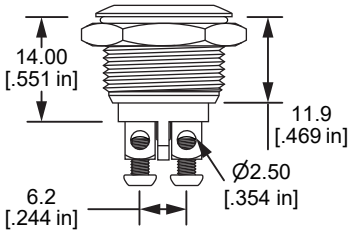

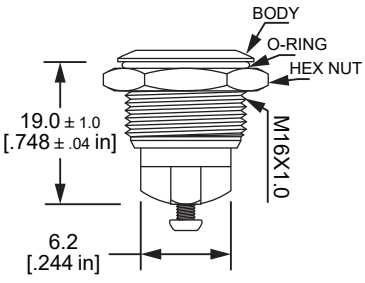

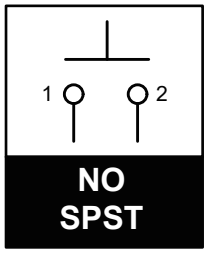

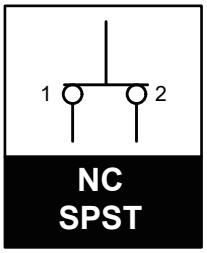

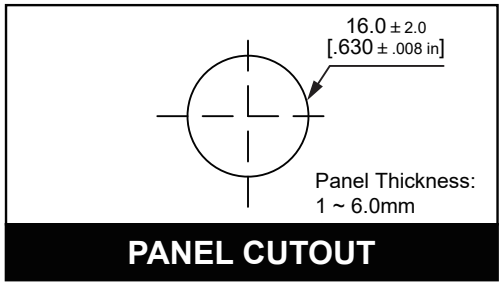

RoHS COMPLIANCE

Anti vandal switch ∅19mm

Applications / Markets

Yacht Controls

Security Devices

Industrial Controls

Kiosks

Electrical Housewares

Medical Equipment

Parking

Audio/ Visual

Kitchen

Car Controls

Order Code

Series	Actuator Options	Terminal Options	Function Options	Material Options		Graphic Options
V19	F- Flat H- High B- Domed	P- Solder lug (2.8x0.5) NONE- Screw	Momentary 1- NO	S- Stainless steel N- Nickel plated brass A- Anodized aluminum G- Gold plated brass	–	NONE- Non-marking LE- Laser etched

Description

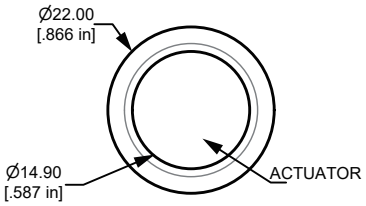

Panel Thickness: 1~8mm

Technical Data

Type	V19-F	V19-B	V19-H
Actuator Options	Flat Actuator	Domed Actuator	High Actuator
Terminal	Screw/ Solder (2.8X0.5)		
Max.Switch Rating	2A 48VDC		
Contact Resistance	≤50mΩ		
Insulation Resistance	≥1000mΩ		
Dielectric Strength	2000VAC		
Operation Temp	-20℃ ～+55℃		
Mechanical Life	1,000,000 Cycles		
Electrical Life	200,000 Cycles		
Contact Material	Silver Alloy		
Torque	5～14Nm		
Operation Pressure	approx. 4N		
Protection	IP65/ IK08		
Material			
Actuator	Stainless steel/ Gold or Nickel plated brass/ Anodized aluminum		
Body	Stainless steel/ Gold or Nickel plated brass/ Anodized aluminum		
Base	PBT		

Actuator Options

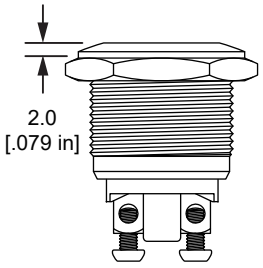

Flat Actuator

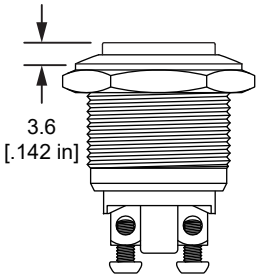

High Actuator

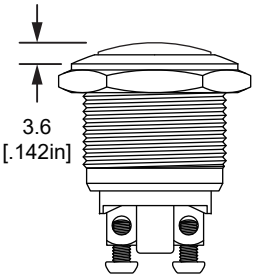

Domed Actuator

Anti vandal switch ∅19mm

Solder Terminal

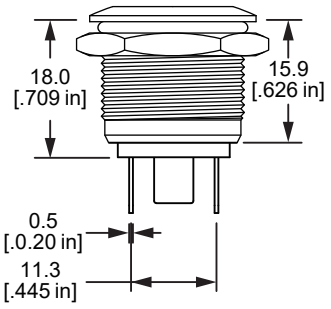

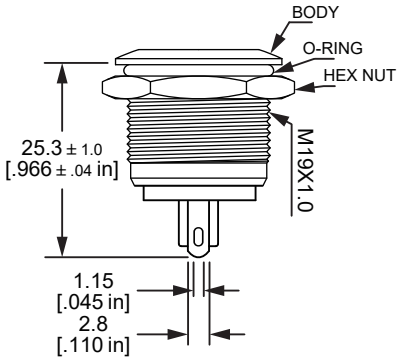

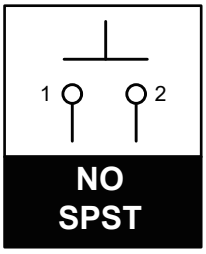

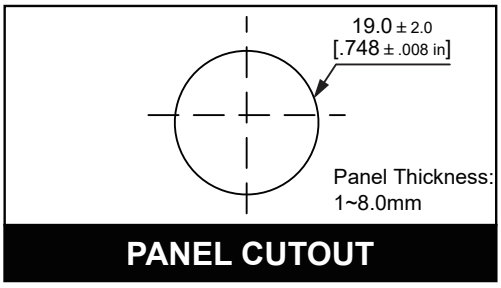

Screw Terminal

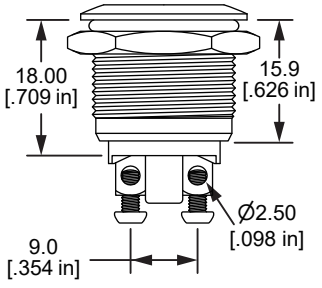

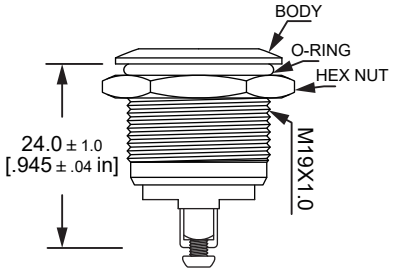

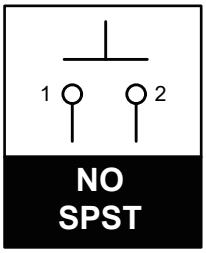

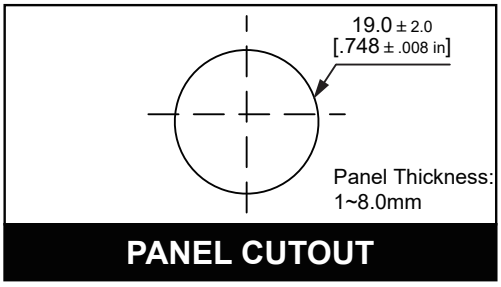

RoHS COMPLIANCE

Anti vandal switch ∅19mm(Short body)

Applications / Markets

Yacht Controls

Security Devices

Industrial Controls

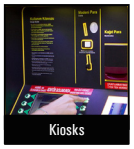
Kiosks

Electrical Housewares

Medical Equipment

Parking

Audio/ Visual

Kitchen

Car Controls

Order Code

Series	Actuator Options	Terminal Options	Function Options	Material Options		Graphic Options
Vs19	F- Flat H- High B- Domed	P- Solder lug (2.8x0.5) NONE- Screw	Momentary 1- NO 2- NC	S- Stainless steel N- Nickel plated brass A- Anodized aluminum	–	NONE- Non-marking LE- Laser etched

Description

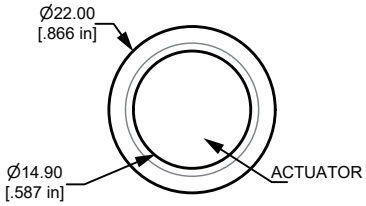

Panel Thickness: 1~6mm

Technical Data

Type	Vs19-F	Vs19-B	Vs19-H
Actuator Options	Flat Actuator	Domed Actuator	High Actuator
Terminal	Screw/ Solder (2.8X0.5)		
Max.Switch Rating	2A 48VDC		
Contact Resistance	≤50mΩ		
Insulation Resistance	≥1000mΩ		
Dielectric Strength	2000VAC		
Operation Temp	-20℃ ～+55℃		
Mechanical Life	1,000,000 Cycles		
Electrical Life	200,000 Cycles		
Contact Material	Silver Alloy		
Torque	5～14Nm		
Operation Pressure	approx. 4N		
Protection	IP65/ IK08		
Material			
Actuator	Stainless steel/ Nickel plated brass/ Anodized aluminum		
Body	Stainless steel/ Nickel plated brass/ Anodized aluminum		
Base	PBT		

Actuator Options

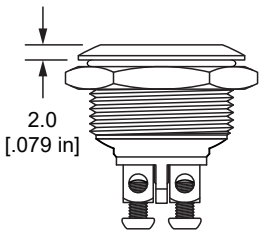

Flat Actuator

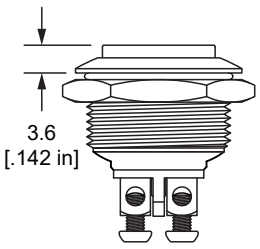

High Actuator

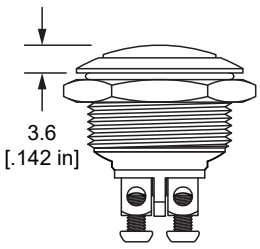

Domed Actuator

Solder Terminal

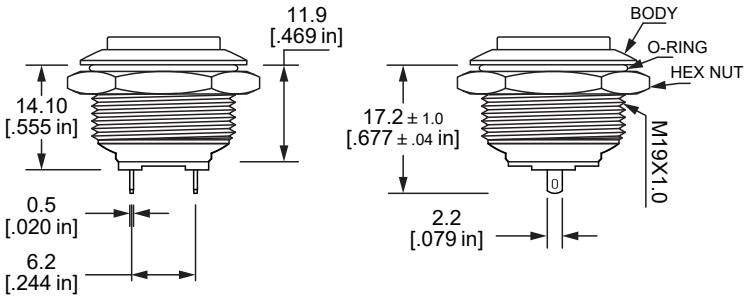

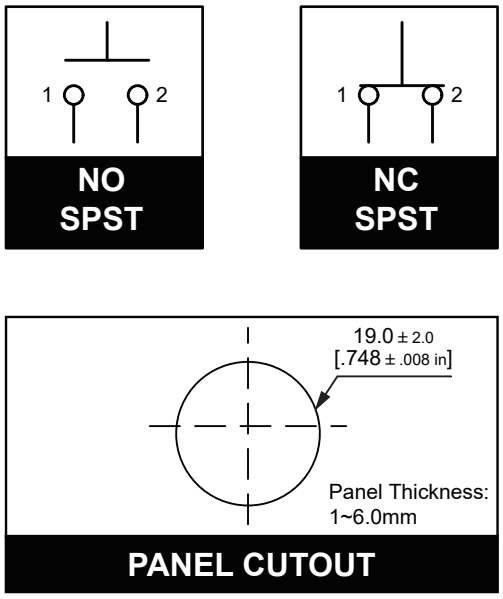

Screw Terminal

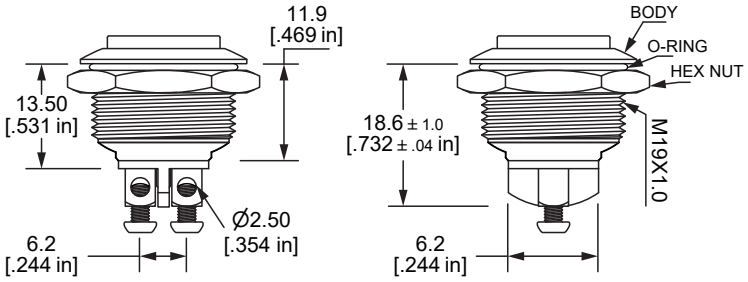

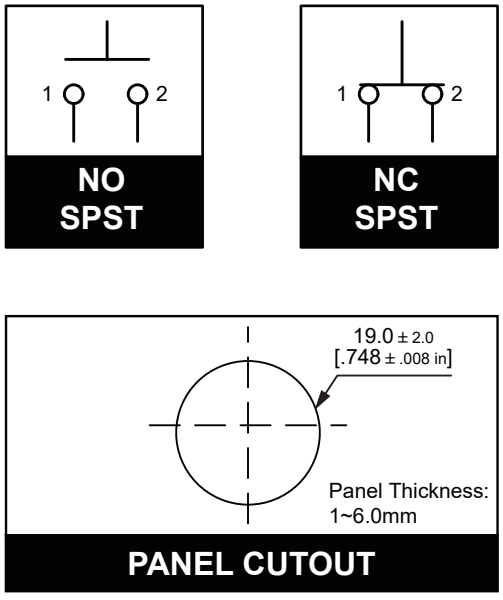

RoHS COMPLIANCE

Anti vandal switch ∅22mm

Applications / Markets

Yacht Controls

Security Devices

Industrial Controls

Kiosks

Electrical Housewares

Medical Equipment

Parking

Audio/ Visual

Kitchen

Car Controls

Order Code

Series	Actuator Options	Terminal Options	Function Options	Material Options		Graphic Options
V22	F- Flat H- High B- Domed	P- Solder lug (2.8x0.5) NONE- Screw	Momentary 1- NO	S- Stainless steel	–	NONE- Non-marking LE- Laser etched

Description

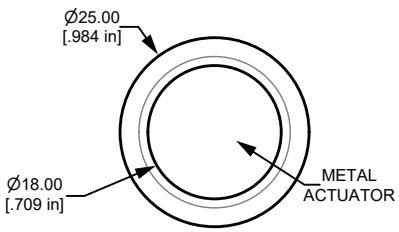

Panel Thickness: 1~8mm

Technical Data

Type	V22-F	V22-B	V22-H
Front Shape	Flat	Domed	High Flat
Terminal	Screw/ Pin (2.8X0.5)		
Max.Switch Rating	2A 48VDC		
Contact Resistance	≤50mΩ		
Insulation Resistance	≥1000mΩ		
Dielectric Strength	2000VAC		
Operation Temp	-20℃ ～+55℃		
Mechanical Life	1,000,000 Cycles		
Electrical Life	200,000 Cycles		
Contact Material	Silver Alloy		
Torque	5～14Nm		
Operation Pressure	approx. 5.5N		
Protection	IP65/ IK09		
Material			
Actuator	Stainless Steel		
Body	Stainless Steel		
Base	PBT		

Actuator Options

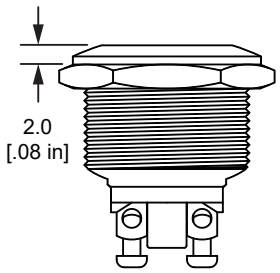

Flat Actuator

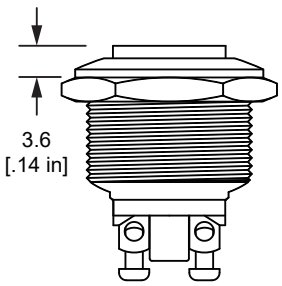

High Actuator

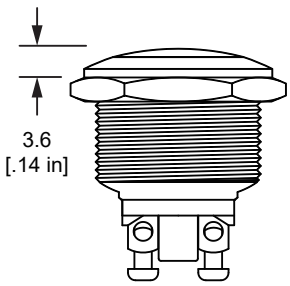

Domed Actuator

Anti vandal switch ∅22mm

Solder Terminal

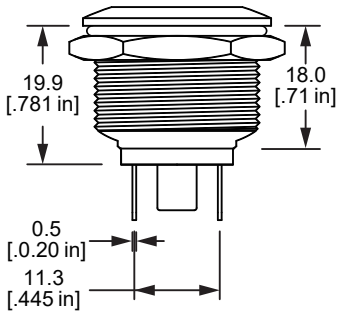

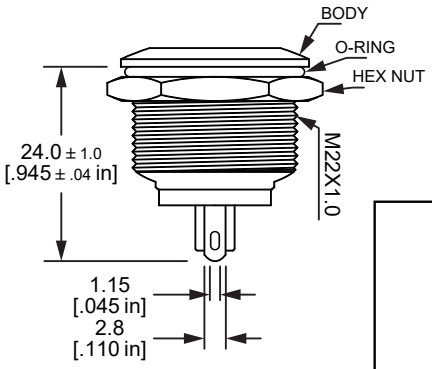

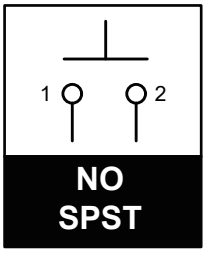

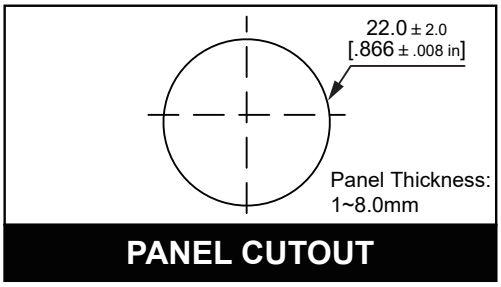

Screw Terminal

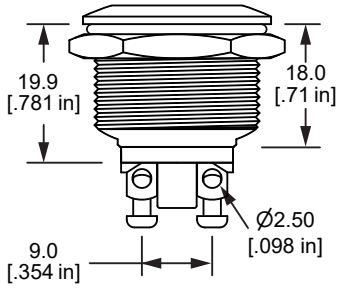

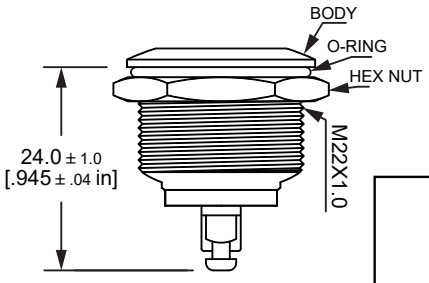

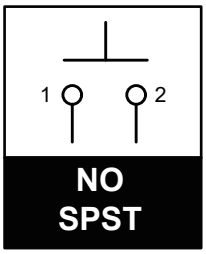

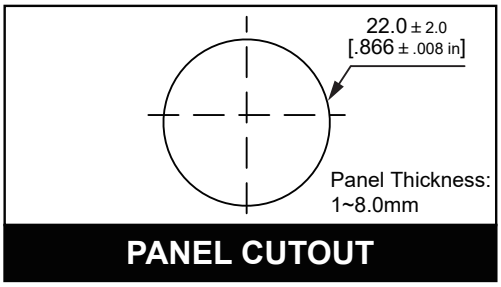

Illuminated

RoHS COMPLIANCE

Anti vandal switch ∅12mm

Applications / Markets

Yacht Controls

Security Devices

Industrial Controls

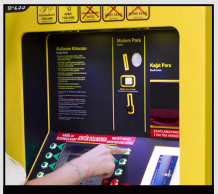
Kiosks

Electrical Housewares

Medical Equipment

Specifications

Electrical Rating: 2A36VDC
Mechanical Life: 200,000 Cycles
Electrical Life: 50,000 Cycles
Contact Resistance: 50mΩ Max.
Insulation Resistance: 1000 MΩ Min.
Dielectric Strength: 2,000VAC
Operating/Storage Temperature: -20°C to 55°C
Travel: 1.50mm
Moisture Protection: IP65
Actuation Force: 4N
Panel Thickness: 1-11mm
Mounting Nut Torque: 5-14Nm

Features & Benefits

- 12mm diameter panel cutout
- Variety LED option
- Dot, ring illumination available
- Multiple actuator options
- Pilot indicator option
- IP65 rated,
- Momentary Off-(On), Latching Off-On

Part Number Configurator

Series	Actuator Options	Terminal Options	Function Options	Rating Options	Material Options	Illumination Style Options	Led-Color Options	Illumination Voltage Options
L12	☐	☐	☐	☐	☐	☐	☐	☐
	F - Flat **H** - High	**Solder Lug**	**M** - Momentary Off-(On) **Z** - Latching Off - On	**NONE** - Max. 2A36VDC	**S** - Stainless Steel **B** - Nickel plated brass	**NONE** - Non-Illuminated **D** - Dot Illumination **R** - Ring Illumination	**NONE** - Non-Illuminated **W** - White **R** - Red **O** - Orange **G** - Green **B** - Blue **Y** - Yellow	**NONE**- Base Voltage* **3.3V** **6V** **12V** **24V**

NOTES:
* Base voltage on LEDs:
1.8V @ 20mA for Red, Yellow and Orange LED colors
2.8V @ 20mA for Blue, Green and White LED colors

Specifications subject to change without notice

Anti vandal switch ∅12mm

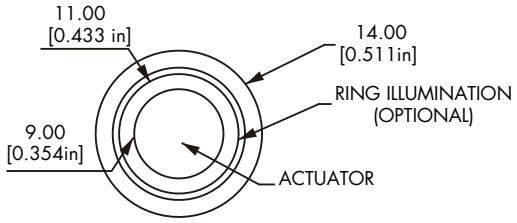

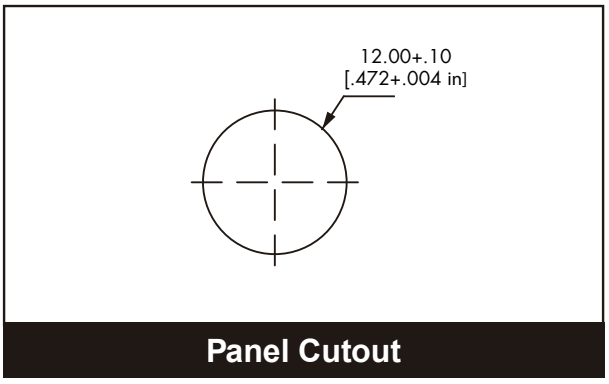

Schematic & Actuator

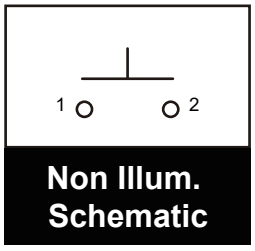

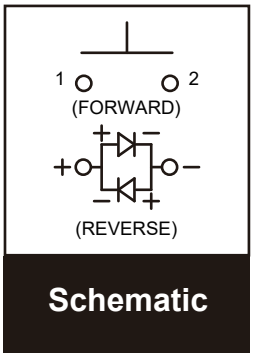

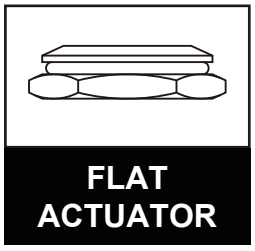

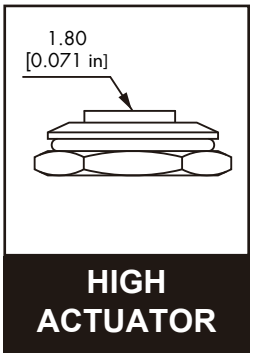

Illumination Options

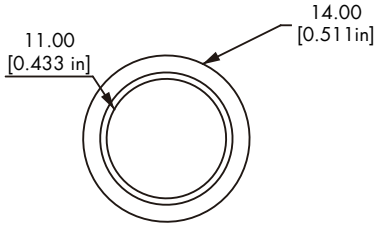

Non-illuminated

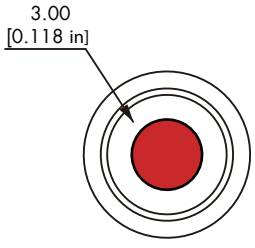

Dot-illuminated

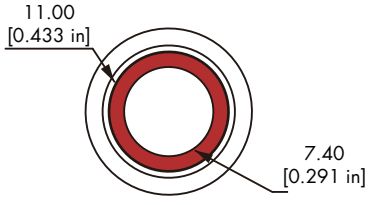

Ring-illuminated

Non-illuminated

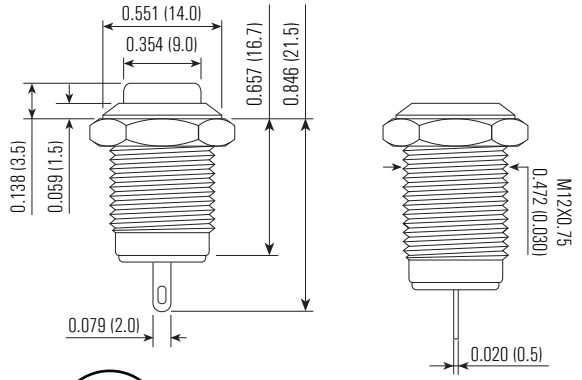

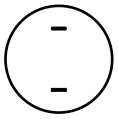

Latching

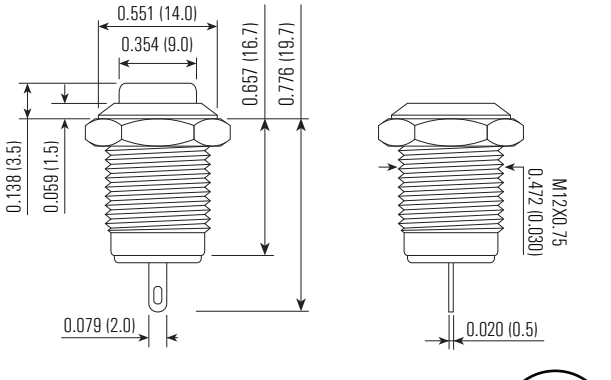

Momentary

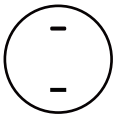

Ring-illuminated

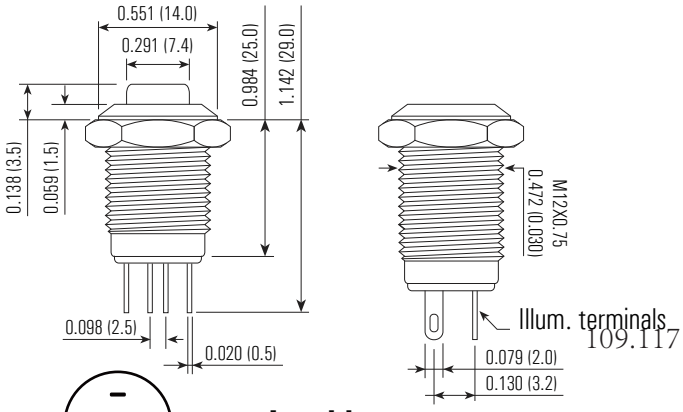

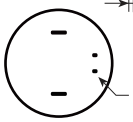

Latching

109.117

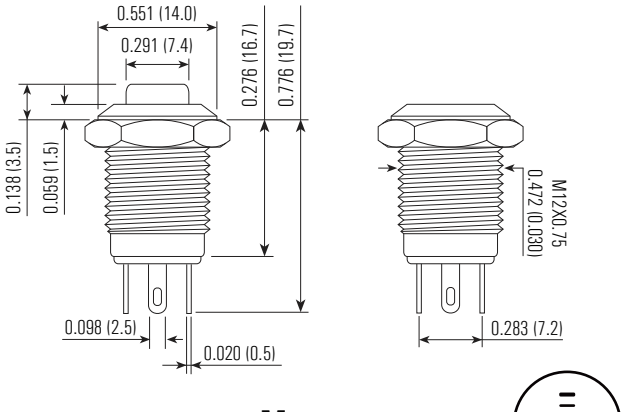

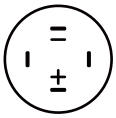

Momentary

Dot-illuminated

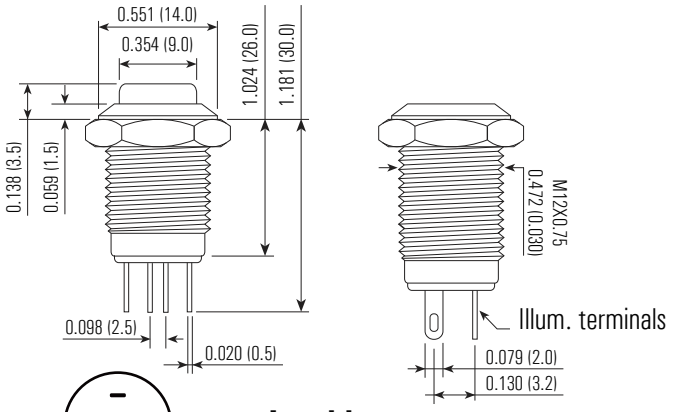

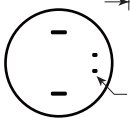

Latching

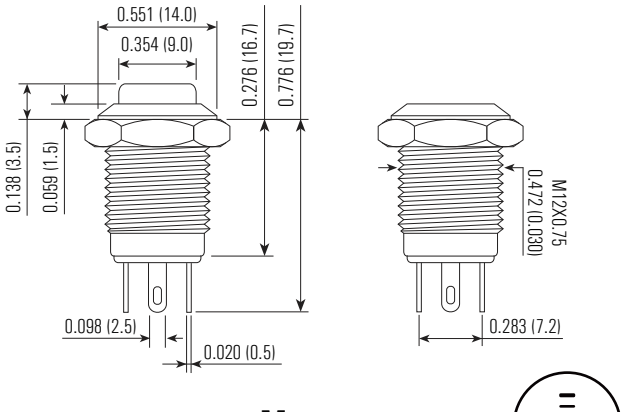

Momentary

RoHS COMPLIANCE

Anti vandal switch ∅16mm

Applications / Markets

Yacht Controls

Security Devices

Industrial Controls

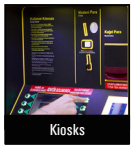
Kiosks

Electrical Housewares

Medical Equipment

Parking

Audio/ Visual

Kitchen

Car Controls

Description

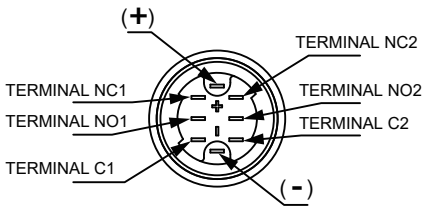

C = Common
NO = Normally open
NC = Normally closed

Terminals (-) and (+) used with Illum. option only

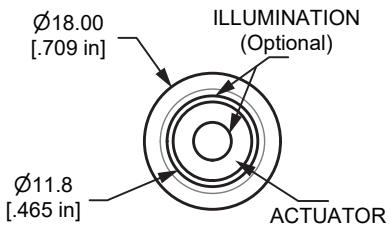

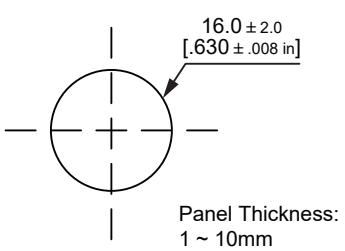

PANEL CUTOUT

Order Code

Series	Actuator Options	Terminal Options	Function Options	Material Options	Illumination Style Options	Led-Color Options	Illumination Voltage Options	Protection	Graphic Options
L16	F- Flat H- Raised	NONE- Solder-lug (2.8x0.5)	M- Momentary 1- 1NO1NC 2- 2NO2NC Z- Latching 1- 1NO1NC 2- 2NO2NC	S- Stainless steel N- Nickel plated brass A- Anodized aluminum	D- Dot illum. R- Ring illum. NONE- non-illum. PS- Power backlit symbol PY- Ring illum. & Power backlit symbol	W- White Y- Yellow B- Blue G- Green R- Red O- Orange	NONE- Base Voltage* 3.3V 6V 12V 24V 36V 110V 220V	NONE- IP40 IP65	NONE- Non-marking LP- Laser etched PS- Symbol translucent power only

NOTES:
* Base voltage on LEDs:
1.8V @ 20mA for Red, Yellow and Orange LED colors
2.8V @ 20mA for Blue, Green and White LED colors

Technical Data

Type	L16-F/ L16-H
Illuminated Type	Non-Illuminated/ Ring Illuminated/ Dot Illuminated/ Backlit
Terminal	Solder lug (1.8X0.4)
Max.Switch Rating	Ith: 3A Ui: 250VAC
Contact Resistance	≤50mΩ
Insulation Resistance	≥1000mΩ
Dielectric Strength	2000VAC
Operation Temp.	-20℃ ~ +55℃
Mechanical Life	200,000 Cycles
Electrical Life	>50,000 Cycles
Contact Material	Silver Alloy
Torque	5 ~ 14Nm
Operation Pressure	approx. 3 ~ 5N
Protection	IP40, IP65/ IK09
Material	
Button	Stainless steel/ Nickel plated brass/ Anodized aluminum
Bodey	Stainless steel/ Nickel plated brass/ Anodized aluminum
Base	PBT
Color	LED 3.3V/ 6V/ 12V/ 24V/ 36V/ 110V/ 220V R G Y O B W
	Approx, 40,000 hours

Anti vandal switch Ø16mm

Dimensions

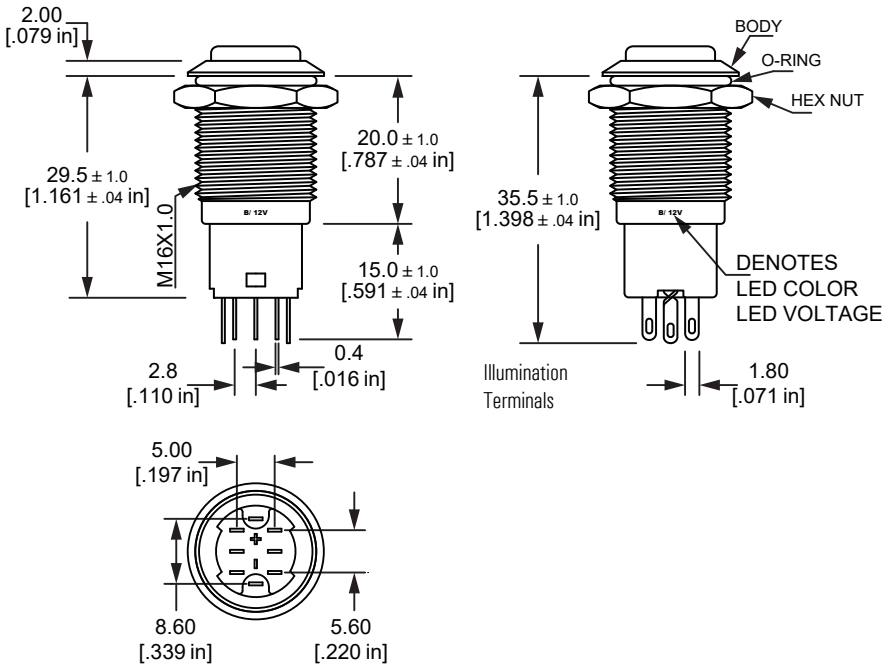

Actuator Options

ACTUATOR OPTIONS

Illum. Options

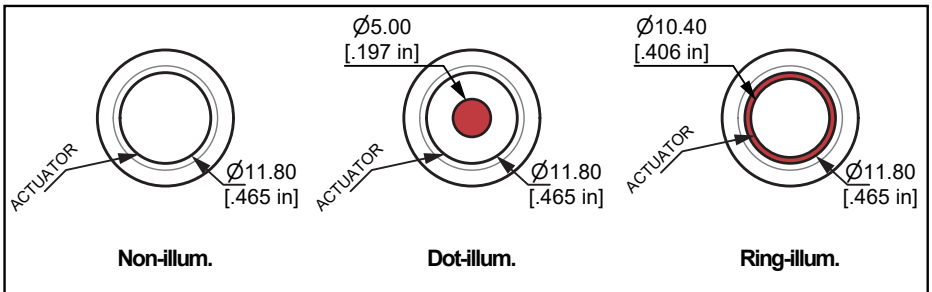

LENS OPTIONS

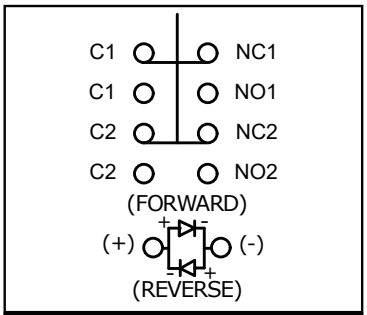

DPDT ILLUM.

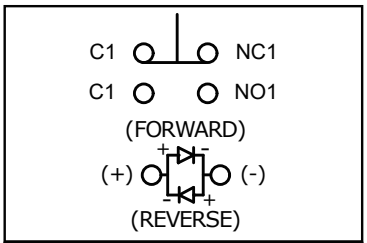

SPDT ILLUM.

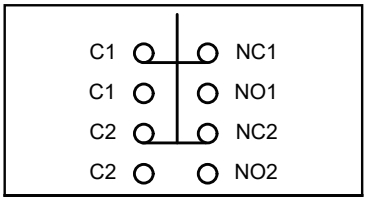

DPDT NON-ILLUM.

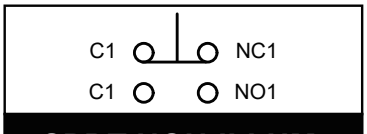

SPDT NON-ILLUM.

SYMBOL ILLUM.

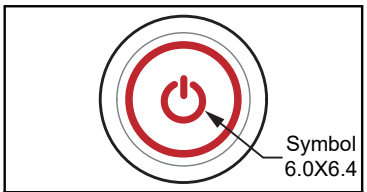

RING ILLUM. & SYMBOL ILLUM.

RoHS COMPLIANCE

Anti vandal switch ∅16mm

Applications / Markets

Yacht Controls

Security Devices

Industrial Controls

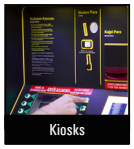
Kiosks

Electrical Housewares

Medical Equipment

Parking

Audio/ Visual

Kitchen

Car Controls

Description

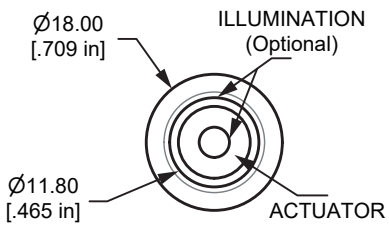

Order Code

Series	Actuator Options	Terminal Options	Function Options	Material Options	Illumination Style Options	Led-Color Options	Illumination Voltage Options	Graphic Options
Ls16	F- Flat	NONE- Solder-lug (2.8x0.5)	M- Momentary 1- 1NO	S- Stainless steel N- Nickel plated brass A- Anodized aluminum	D- Dot illum. R- Ring illum. NONE- non-illum.	W- White Y- Yellow B- Blue G- Green R- Red O- Orange 3A- Red/ Green/ Blue	NONE- Base voltage* 3.3V 6V 12V 24V 36V	NONE- Non-marking LE- Laser etched

NOTES:
* Base voltage on LEDs:
1.8V @ 20mA for Red, Yellow and Orange LED colors
2.8V @ 20mA for Blue, Green and White LED colors

Technical Data

Type	Ls16-F
Illuminated Options	Non-Illuminated/ Ring Illuminated/ Dot Illuminated
Terminal	Solder lug (2.8X0.5)
Max. Switch Rating	2A 36VDC
Contact Resistance	≤50mΩ
Insulation Resistance	≥1000mΩ
Dielectric Strength	2000VAC
Operation Temp	-20℃ ～+55℃
Mechanical Life	1,000,000 Cycles
Electrical Life	200,000 Cycles
Contact Material	Silver Alloy
Torque	5～14Nm
Operation Pressure	approx. 3～5N
Protection	IP65/ IK08
Material	
Actuator	Stainless Steel/ Nickel Plated Brass/ Anodized Aluminum
Body	Stainless Steel/ Nickel Plated Brass/ Anodized Aluminum
Base	PBT
Color	LED
	3.3V/ 6V/ 12V/ 24V/ 36V(The resistor is external)
	R G Y O B W
	Approx, 40,000 hours

Current-limiting Resistance Configuration Table	Operating Voltage(U)		6V	12V	24V	36V	Formula
	Current-limiting Resistance(R)	R Y O	210Ω, 1/4W	510Ω, 1/2W	1.2kΩ, 3/4W	2.2kΩ, 1W	R= U-Ue / Ie
		G B W	160Ω, 1/4W	460Ω, 1/2W	1.2kΩ, 3/4W	2.2kΩ, 1W	

Panel Cutout

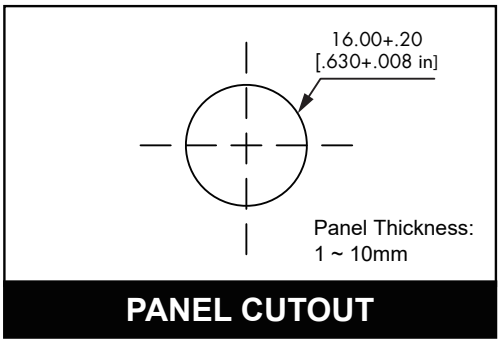

Anti vandal switch Ø16mm

STANDARD ILLUM.

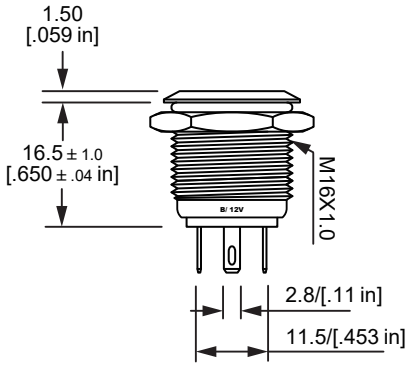

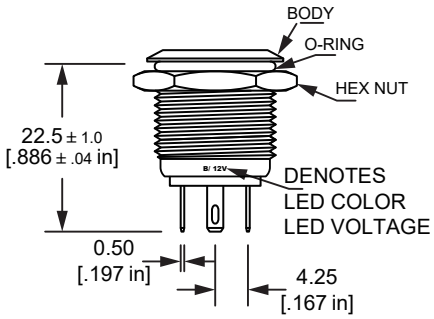

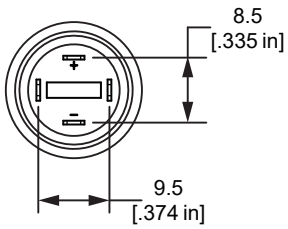

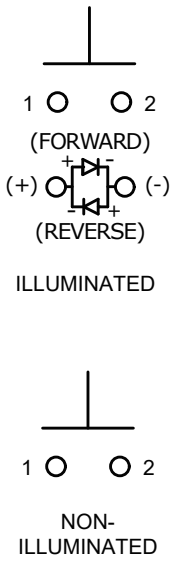

FUNCTIONS

TRI-COLOR

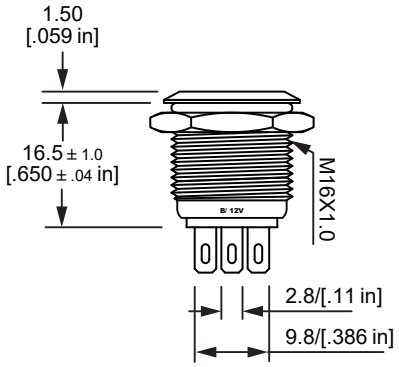

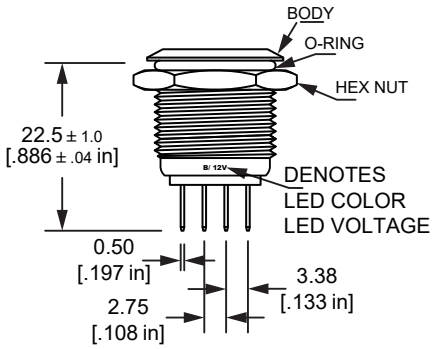

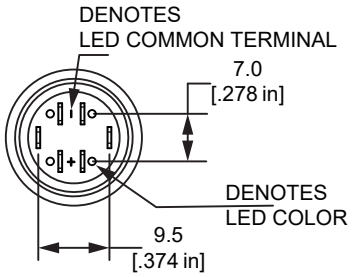

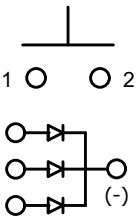

Red/ Green/ Blue
ILLUMINATED

FUNCTIONS

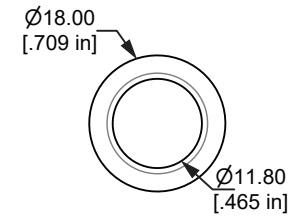

Non-illum.

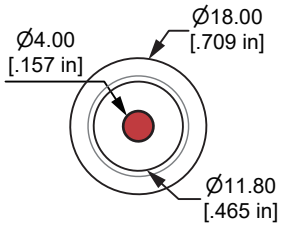

Dot-illum.

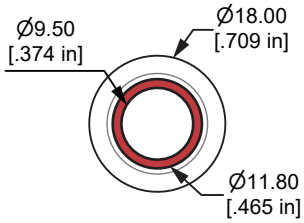

Ring-illum.

LENS OPTIONS

RoHS COMPLIANCE

Anti vandal switch Ø19mm

Applications / Markets

Order Code

Series	Actuator Options	Terminal Options	Function Options	Material Options	Illumination Style Options	Led-Color Options	Illumination Voltage Options		Graphic Options
L19	F- Flat	NONE- Solder-lug (2.8x0.5) N- Screw	M- Momentary 1- 1NO1NC L- Alternated 1- 1NO1NC	S- Stainless steel A- Anodized aluminum	D- Dot illum. R- Ring illum. NONE- non-illum. X- Backlit Label Kit**	W- White Y- Yellow B- Blue G- Green R- Red O- Orange	NONE- Base Voltage* 3.3V 6V 12V 24V 36V 110V 220V	–	NONE- Non-marking LE- Laser etched

NOTES:
* Base voltage on LEDs:
1.8V @ 20mA for Red, Yellow and Orange LED colors / 2.8V @ 20mA for Blue, Green and White LED colors
** 5 ICON labels included, 5 icon labels included, Flat actuator only

Description

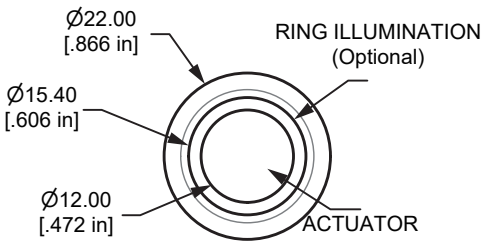

Technical Data

Type	L19-F
Illuminated Options	Non-Illuminated/ Ring Illuminated/ Dot Illuminated/ Backlit
Terminal	Screw and Solder lug (2.8X0.5)
Max. Switch Rating	Ith: 5A Ui: 250VAC
Contact Resistance	≤50mΩ
Insulation Resistance	≥1000mΩ
Dielectric Strength	2000VAC
Operation Temp	-20℃ ~ +55℃
Mechanical Life	1,000,000 Cycles
Electrical Life	>50,000 Cycles
Contact Material	Silver Alloy
Torque	5 ~ 14Nm
Operation Pressure	approx. 8N
Protection	IP65/ IK10
Material	
Actuator	Stainless steel/ Anodized aluminum
Body	Stainless steel/ Anodized aluminum
Base	PA
Color	LED 3.3V/ 6V/ 12V/ 24V/ 36V/ 110V/ 220V R G Y O B W Approx, 40,000 hours

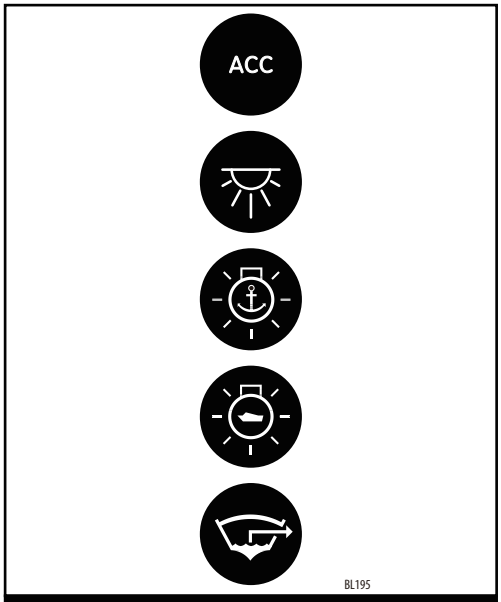

5 ICON labels included

Illuminated Options

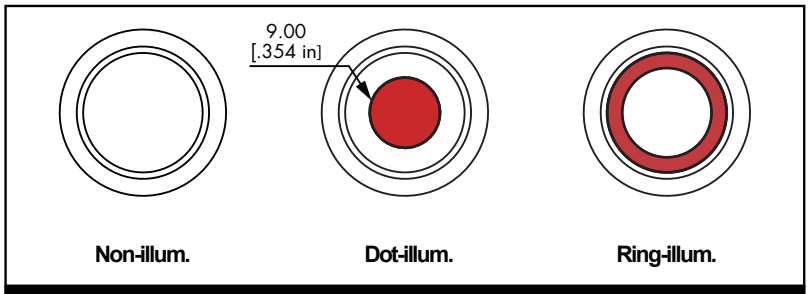

LENS OPTIONS

Anti vandal switch ∅19mm

Momentary

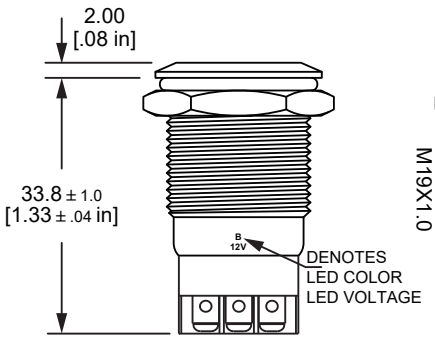

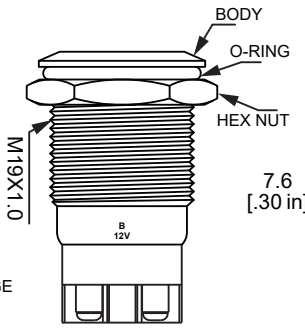

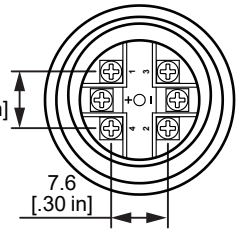

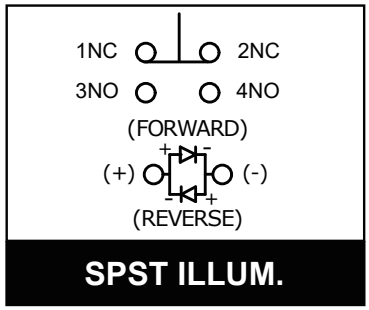

SPST ILLUM.

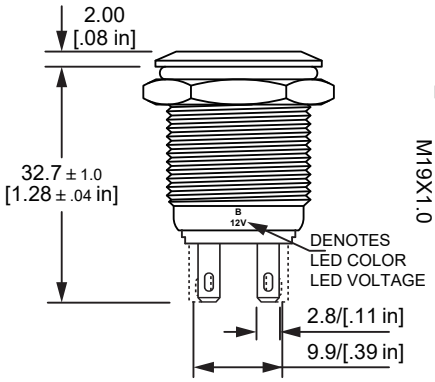

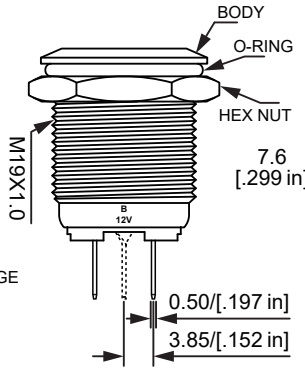

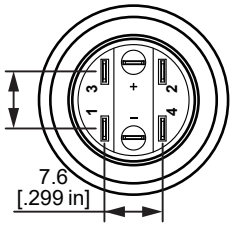

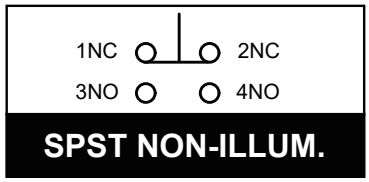

SPST NON-ILLUM.

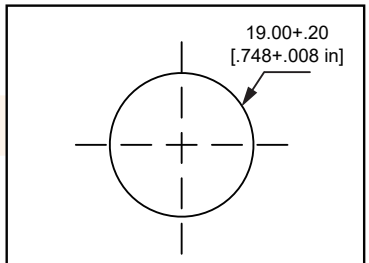

PANEL CUTOUT

Alternated

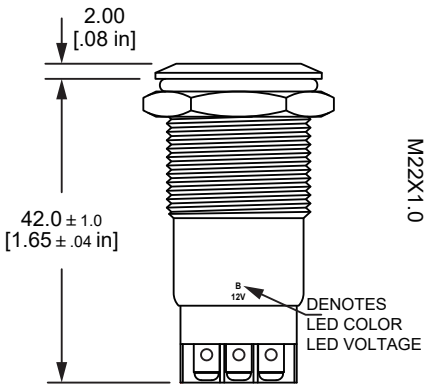

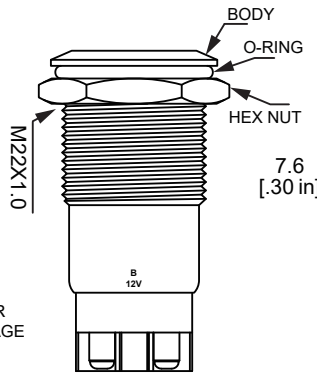

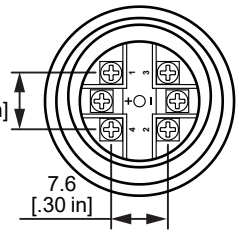

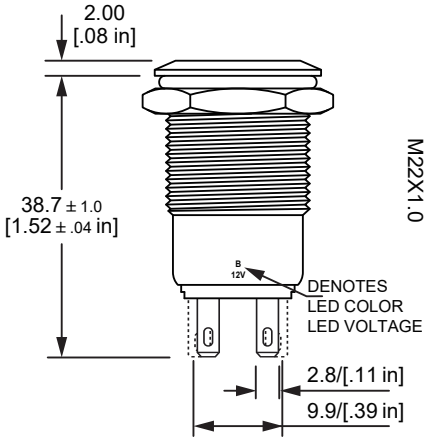

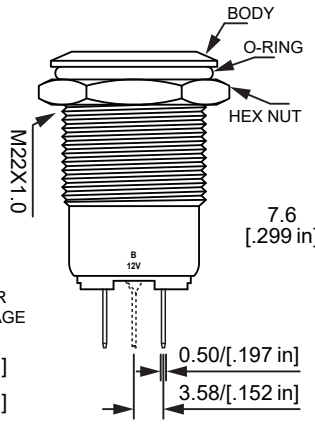

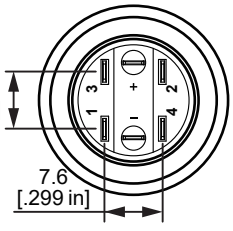

RoHS COMPLIANCE

Anti vandal switch ∅19mm

Applications / Markets

Yacht Controls

Security Devices

Industrial Controls

Kiosks

Electrical Housewares

Medical Equipment

Parking

Audio/ Visual

Kitchen

Car Controls

Description

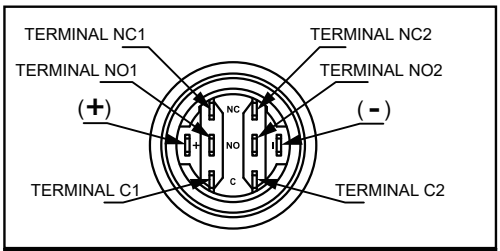

SINGLE & BI-COLOR

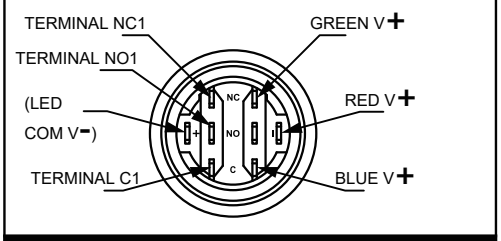

TRI-COLOR

C = Common
NO = Normally open
NC = Normally closed

Terminals (-) and (+) used with Illum. option only

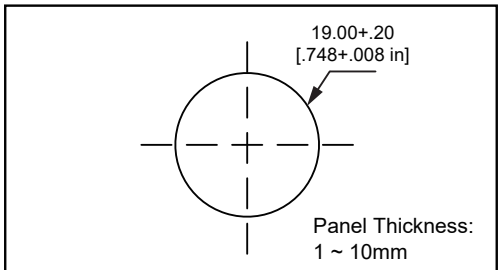

PANEL CUTOUT

Order Code

Series	Actuator Options	Terminal Options	Function Options	Material Options	Illumination Style Options	Led-Color Options	Illumination Voltage Options	Graphic Options
L19A	F- Flat	NONE- Solder-lug (2.8x0.5)	M- Momentary 1- 1NO1NC 2- 2NO2NC Z- Alternated 1- 1NO1NC 2- 2NO2NC	S- Stainless steel	D- Dot illum. R- Ring illum. NONE- non-illum. PS- Power backlit symbol PY- Ring illum. & Power backlit symbol	W- White Y- Yellow B- Blue G- Green R- Red 3A- Red/ Green/ Blue	NONE- Base Voltage* 3.3V 6V 12V 24V 36V 110V 220V	NONE- Non-marking LE- Laser etched

NOTES:
* Base voltage on LEDs:
1.8V @ 20mA for Red, Yellow and Orange LED colors
2.8V @ 20mA for Blue, Green and White LED colors

Technical Data

Type	L19A-F
Illuminated Options	Non-Illuminated/ Ring Illuminated/ Dot Illuminated/ Backlit
Terminal	Solder lug (2.8X0.5)
Max. Switch Rating	Ith: 5A Ui: 250VAC
Contact Resistance	≤50mΩ
Insulation Resistance	≥1000mΩ
Dielectric Strength	2000VAC
Operation Temp	-20℃ ~ +55℃
Mechanical Life	1,000,000 Cycles
Electrical Life	>50,000 Cycles
Contact Material	Silver Alloy
Torque	5 ~ 14Nm
Operation Pressure	approx. 8N
Protection	IP65/ IK10
Material	
Actuator	Stainless steel
Body	Stainless steel
Base	PBT
Color	LED 3.3V/ 6V/ 12V/ 24V/ 36V/ 110V/ 220V R G Y O B W Approx, 40,000 hours

Momentary

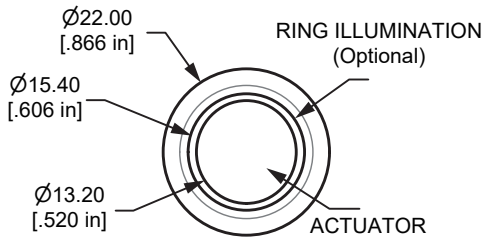

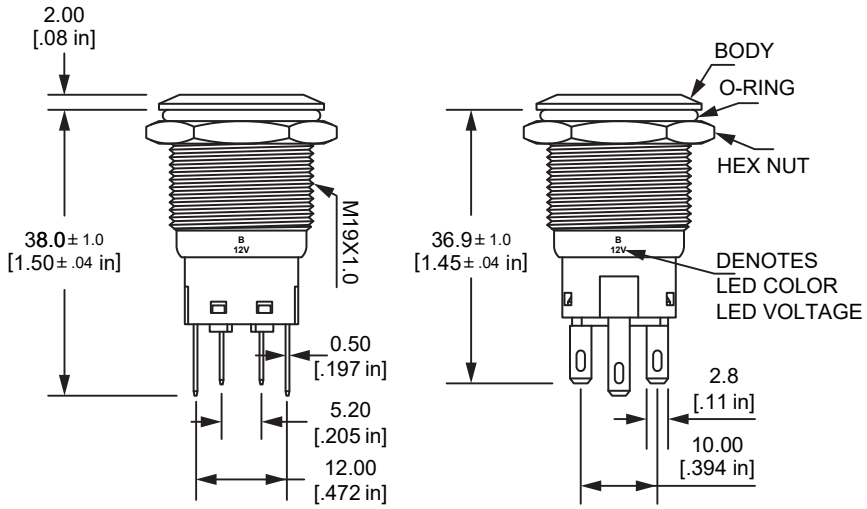

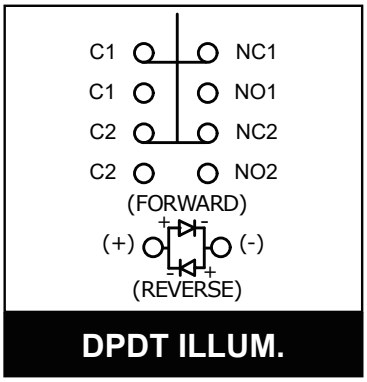

DPDT ILLUM.

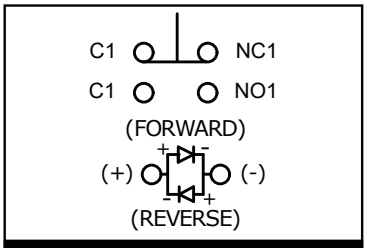

SPDT ILLUM.

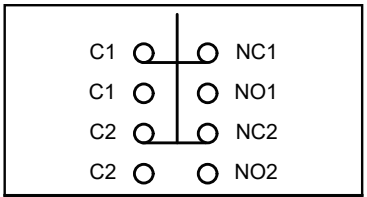

DPDT NON-ILLUM.

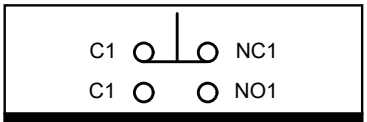

SPDT NON-ILLUM.

Illum. Options

PS

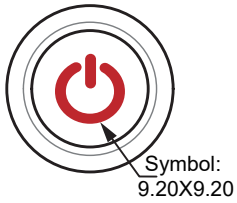

SYMBOL ILLUM.

PY

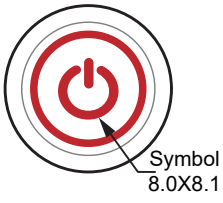

RING ILLUM. & SYMBOL ILLUM.

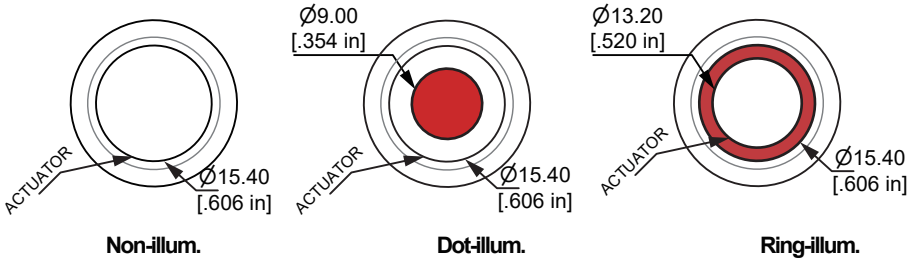

LENS OPTIONS

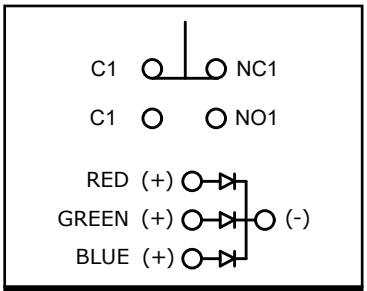

SPDT RGB COLOR

RoHS COMPLIANCE

Anti vandal switch ∅19mm

Applications / Markets

Yacht Controls

Security Devices

Industrial Controls

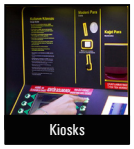
Kiosks

Electrical Housewares

Medical Equipment

Parking

Audio/ Visual

Kitchen

Car Controls

Description

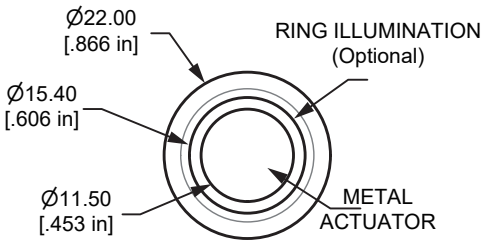

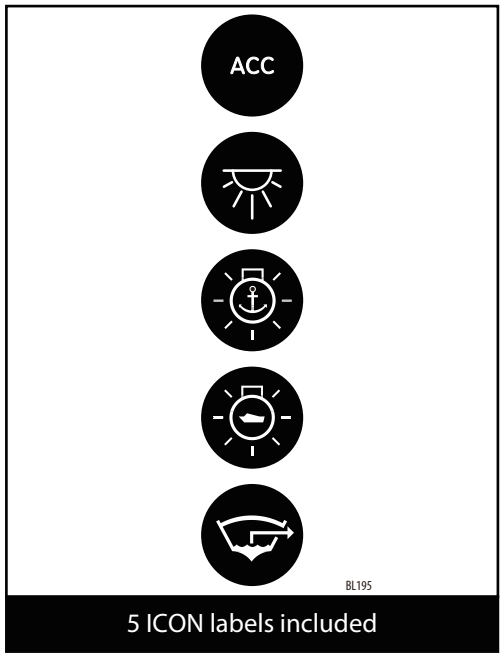

5 ICON labels included

Order Code

Series	Actuator Options	Terminal Options	Function Options	Material Options	Illumination Style Options	Led-Color Options	Illumination Voltage Options		Graphic Options
Ls19	F- Flat	NONE- Solder-lug (2.8x0.5)	M- Momentary 1- 1NO	S- Stainless steel	D- Dot illum. R- Ring illum. NONE- non-illum. X- Backlit Label Kit**	W- White Y- Yellow B- Blue G- Green R- Red O- Orange	NONE- Base voltage* 3.3V 6V 12V 24V 36V		NONE- Non-marking LE- Laser etched

NOTES:
* Base voltage on LEDs:
1.8V @ 20mA for Red, Yellow and Orange LED colors / 2.8V @ 20mA for Blue, Green and White LED colors
** 5 ICON labels included, 5 icon labels included, Flat actuator only

Technical Data

Type	Ls19-F
Illuminated Options	Non-Illuminated/ Ring Illuminated/ Dot Illuminated
Terminal	Solder lug (2.8X0.5)
Max. Switch Rating	2A 36VDC
Contact Resistance	≤50mΩ
Insulation Resistance	≥1000mΩ
Dielectric Strength	2000VAC
Operation Temp	-20℃ ～+55℃
Mechanical Life	1,000,000 Cycles
Electrical Life	200,000 Cycles
Contact Material	Silver Alloy
Torque	5～14Nm
Operation Pressure	approx. 3～5N
Protection	IP65/ IK08
Material	
Actuator	Stainless steel
Body	Stainless steel
Base	PBT
Color	LED
	3.3V/ 6V/ 12V/ 24V/ 36V(The resistor is external)
	R G Y O B W
	Approx, 40,000 hours

Current-limiting Resistance Configuration Table	Operating Voltage(U)		6V	12V	24V	36V	Formula
	Current-limiting Resistance(R)	R Y O	210Ω, 1/4W	510Ω, 1/2W	1.2kΩ, 3/4W	2.2kΩ, 1W	R= (U-Ue)/Ie
		G B W	160Ω, 1/4W	460Ω, 1/2W	1.2kΩ, 3/4W	2.2kΩ, 1W	

Dimensions

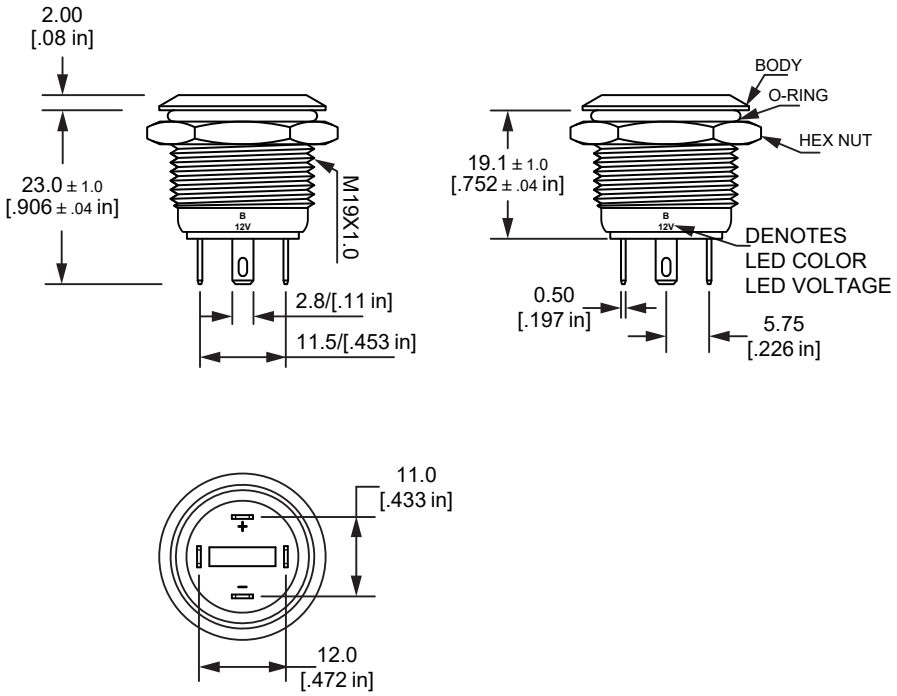

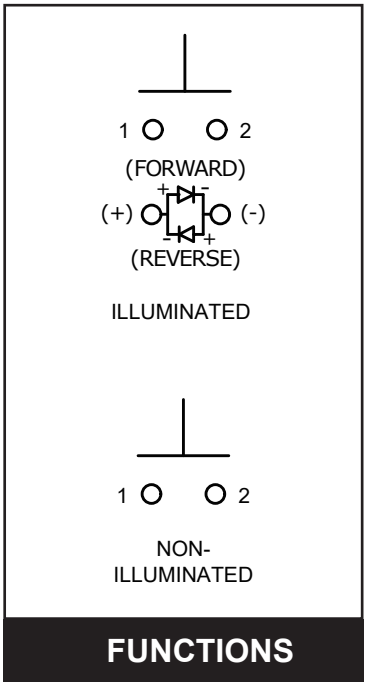

FUNCTIONS

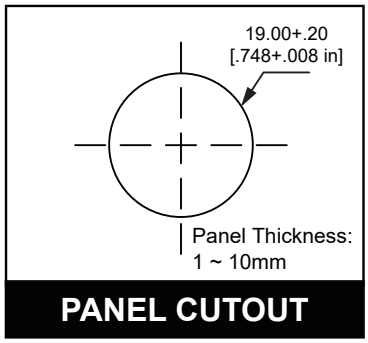

PANEL CUTOUT

Illum. Options

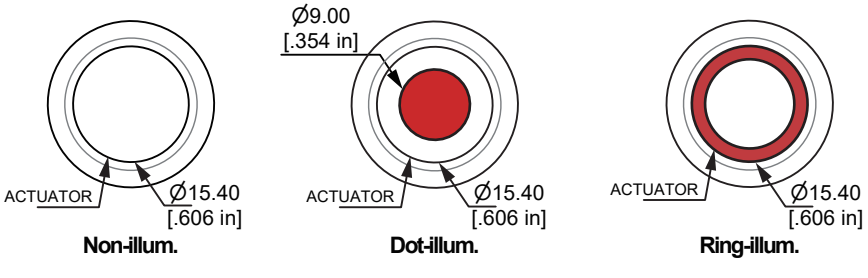

LENS OPTIONS

RoHS COMPLIANCE

Micro-trip anti vandal switch ∅19mm

Applications / Markets

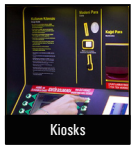

Order Code

Series	Actuator Options	Terminal Options	Function Options	Material Options	Illumination Style Options	Led-Color Options	Illumination Voltage Options		Graphic Options
L19M Micro-trip	F- Flat	NONE- Solder-lug (2.8x0.5) N- Screw	M- Momentary 1- 1NO	S- Stainless steel	D- Dot illum. R- Ring illum. NONE- non-illum. PS- Power backlit symbol PY- Ring illum. & Power backlit symbol X- Backlit Label Kit**	W- White Y- Yellow B- Blue G- Green R- Red 3A- Red/ Green/ Blue	NONE- Base voltage* 3.3V 6V 12V 24V 36V	–	NONE- Non-marking LE- Laser etched

NOTES:
* Base voltage on LEDs:
1.8V @ 20mA for Red and Yellow LED colors
2.8V @ 20mA for Blue, Green and White LED colors
** 5 ICON labels included, 5 icon labels included, Flat actuator only

Description

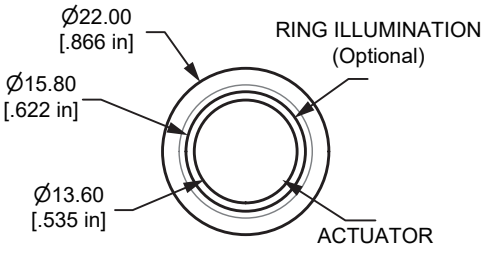

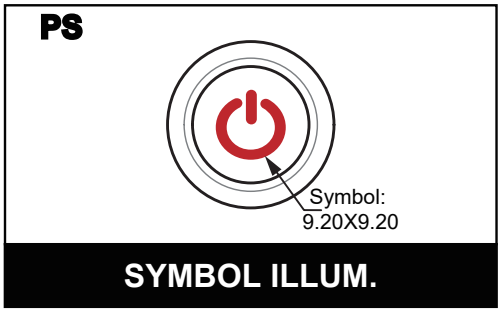

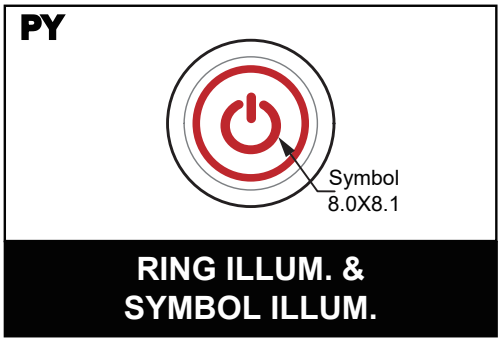

Technical Data

Type	L19M-F
Illuminated Options	Non-Illuminated/ Ring Illuminated/ Dot Illuminated
Terminal	Screw and Solder lug (2.8X0.8)
Max. Switch Rating	50mA 24VDC
Contact Resistance	≤100mΩ
Insulation Resistance	≥1000mΩ
Dielectric Strength	2000VAC
Operation Temp	-20℃ ～+55℃
Mechanical Life	1,000,000 Cycles
Electrical Life	50,000 Cycles
Contact Material	Silver Alloy
Rear Nut Fixing Torque	0.57Nm
Operation Pressure	approx. 8N
Protection	IP65/ IK09
Material	
Switch Assembly	UL94V-0 Rated Polyamide (Nylon)
Tags	Copper Alloy
Terminals	Copper Alloy
Switch Body & Button	Stainless Steel/ *Anodized Aluminum
Lens and Lens Body	Polycarbonate
Internal Seal	Silicone
O Ring	Nitrile
Color	LED 3.3V/ 6V/ 12V/ 24V/ 36V R G Y B W Approx, 40,000 hours

Screw Terminal

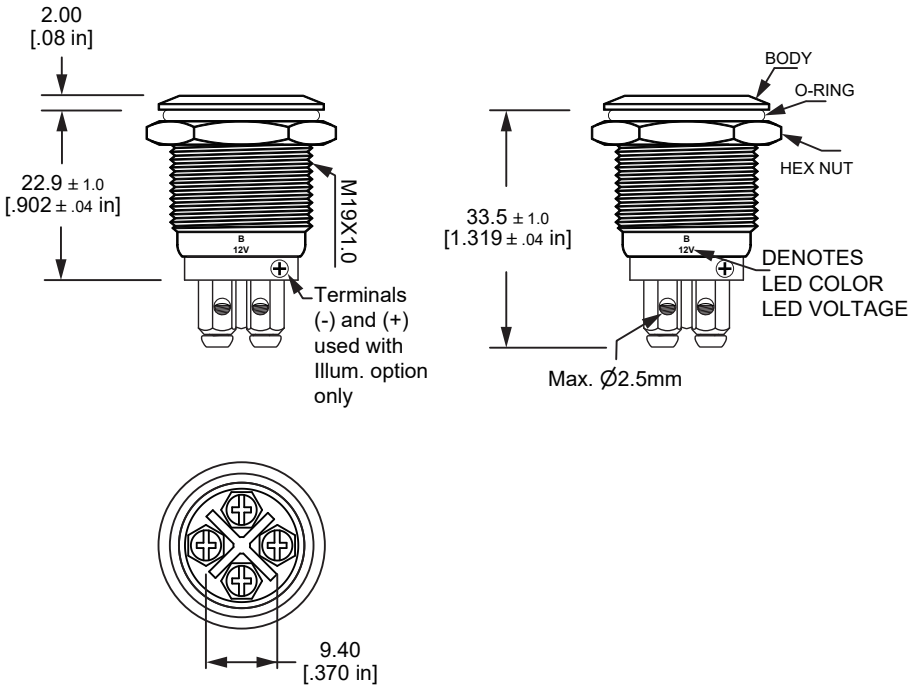

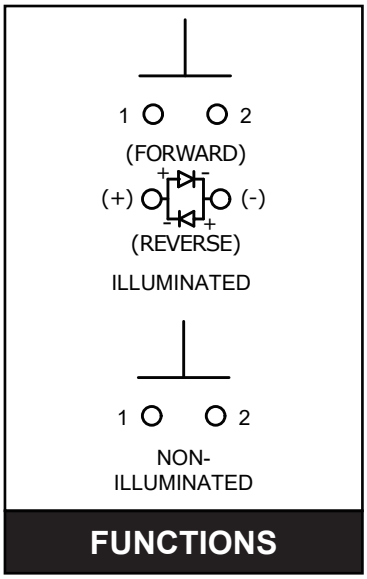

FUNCTIONS

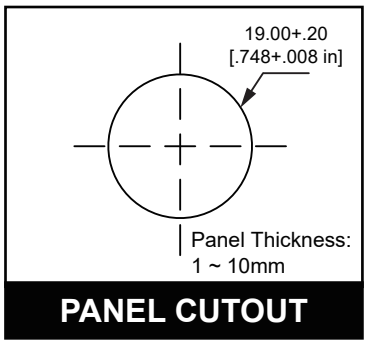

PANEL CUTOUT

Solder Terminal

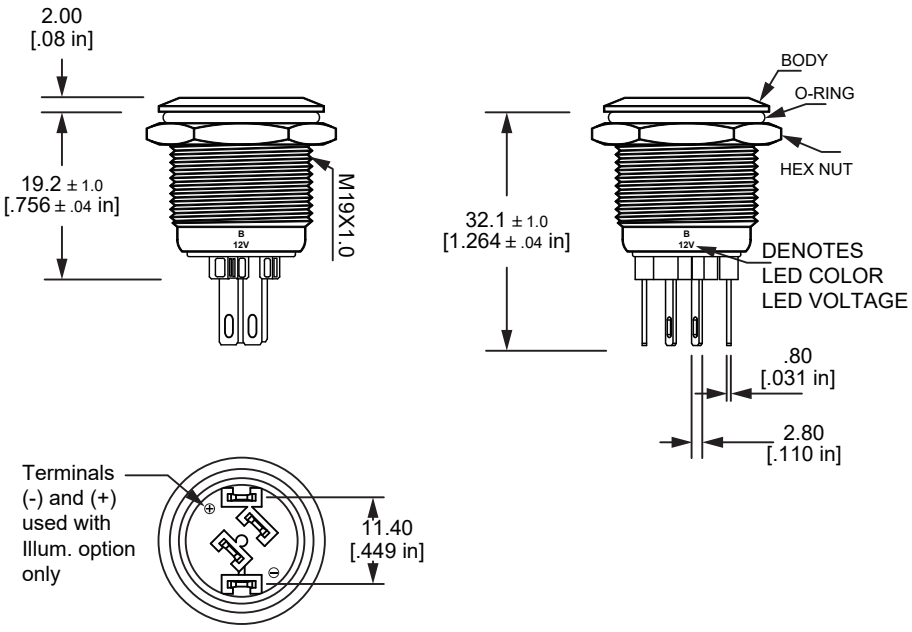

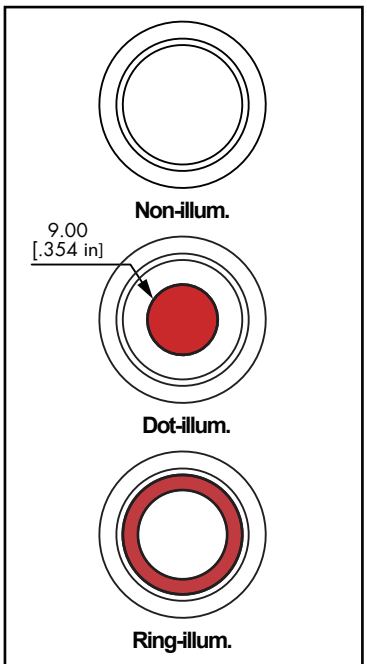

LENS OPTIONS

RoHS COMPLIANCE

High current anti vandal switch ∅19mm

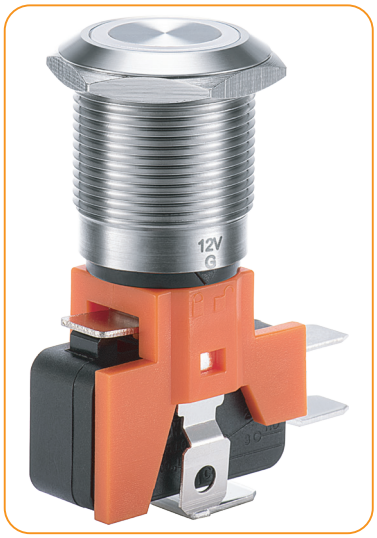

Applications / Markets

Yacht Controls

Security Devices

Industrial Controls

Kiosks

Electrical Housewares

Medical Equipment

Parking

Audio/ Visual

Kitchen

Car Controls

Order Code

Series	Actuator Options	Terminal Options	Function Options	Current Options	Material Options	Illumination Style Options	Led-Color Options	Illumination Voltage Options		Graphic Options
L19B	F- Flat	NONE- quick connect terminal (6.35X0.8)	M- Momentary 1 1NO (SPST) 2 1NC (SPST) 3 1NO1NC (SPDT) Z- Alternated 1 1NO (SPST) 2 1NC (SPST) 3 1NO1NC (SPDT)	02- 2.5A 03- 3A 05- 5A 08- 8A 10- 10A 16- 16A 21- 21A (250VAC/125VAC) D6- 0.6A/ 125VDC D3- 0.3A/ 250VDC	S- Stainless steel	D- Dot illum. R- Ring illum. NONE- non-illum.	W- White Y- Yellow B- Blue G- Green R- Red O- Orange	NONE- Base Voltage* 3.3V 6V 12V 24V 36V 110V 220V		NONE- Non-marking LE- Laser etched

NOTES:
* Base voltage on LEDs:
1.8V @ 20mA for Red, Yellow and Orange LED colors
2.8V @ 20mA for Blue, Green and White LED colors

Description

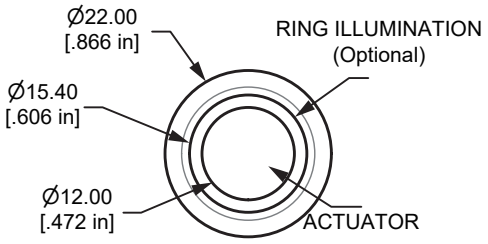

Panel Thickness: 1-12mm

Panel Cutout

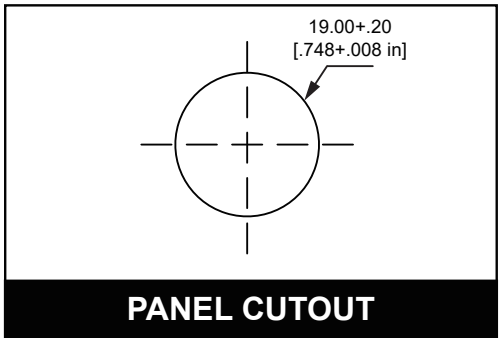

Technical Data

Type	L19B-F
Illuminated Options	Non-Illuminated/ Ring Illuminated/ Dot Illuminated
Terminal	Quick connect terminal (6.35x0.8)
Max. Switch Rating	3A 5A 8A 10A 15A(16A) 20A(21A)/ 250VAC, 125VAC 0.6A/ 125VDC 0.3A/ 250VDC
Contact Resistance	≤25mΩ
Insulation Resistance	≥100mΩ
Dielectric Strength	Between non-consecutive terminals 1,000Vrms, 50/60Hz for 1min Between non-current carrying metal parts and each terminal 1,500Vrms, 50/60Hz for 1min Between ground and each terminal 1,500Vrms, 50/60Hz for 1min
Shock resistance	Detruction: O.F.>0.5N: 1000m/s2 (approx. 100g), O.F.≤0.5N: 400m/s2 (approx. 40g) Malfunction: O.F.>0.5N: 200m/s2 (approx. 20g), O.F.≤0.5N: 100m/s2 (approx. 10g)
Vibration Resistance	10 - 50Hz, 1.5mm Double Amplitude
Ambient Temp.	-25℃ ~ +85℃
Mechanical Life	2,000,000cycles
Electrical Life	50,000cycles
Contact Material	Silver Alloy
Torque	5 ~ 14Nm
Operation Pressure	10N
Protection	IP65/ IK09
Material	
Actuator	Stainless steel
Body	Stainless steel
Color	LED 3.3V/ 6V/ 12V/ 24V/ 36V/ 110V/ 220V R G Y O B W
	Approx. 40, 000

Momentary

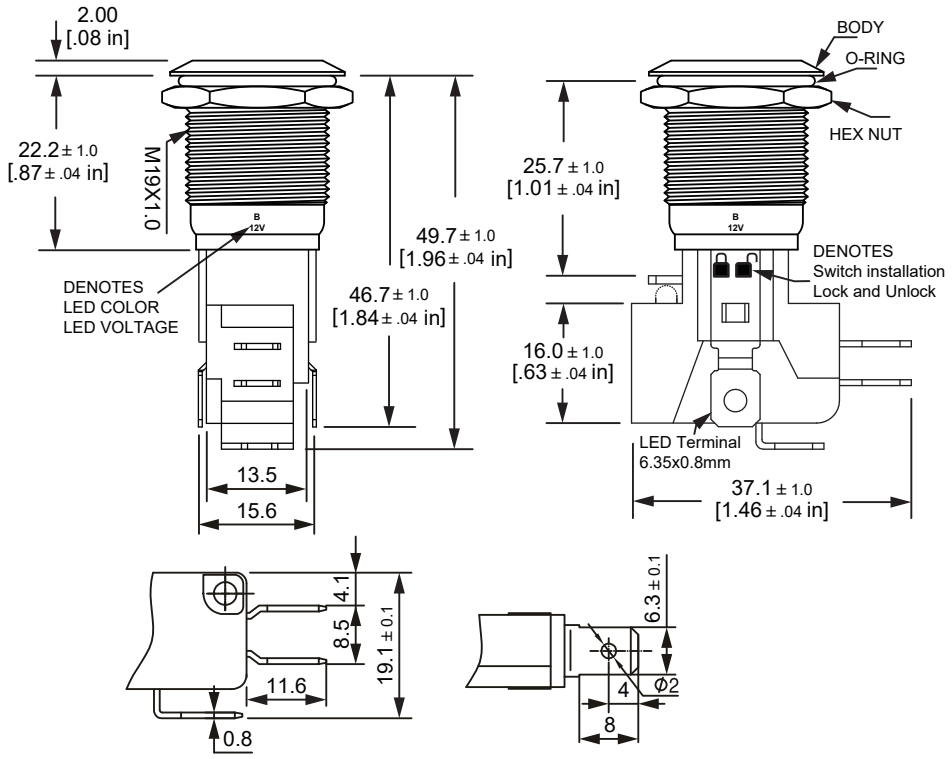

Alternated

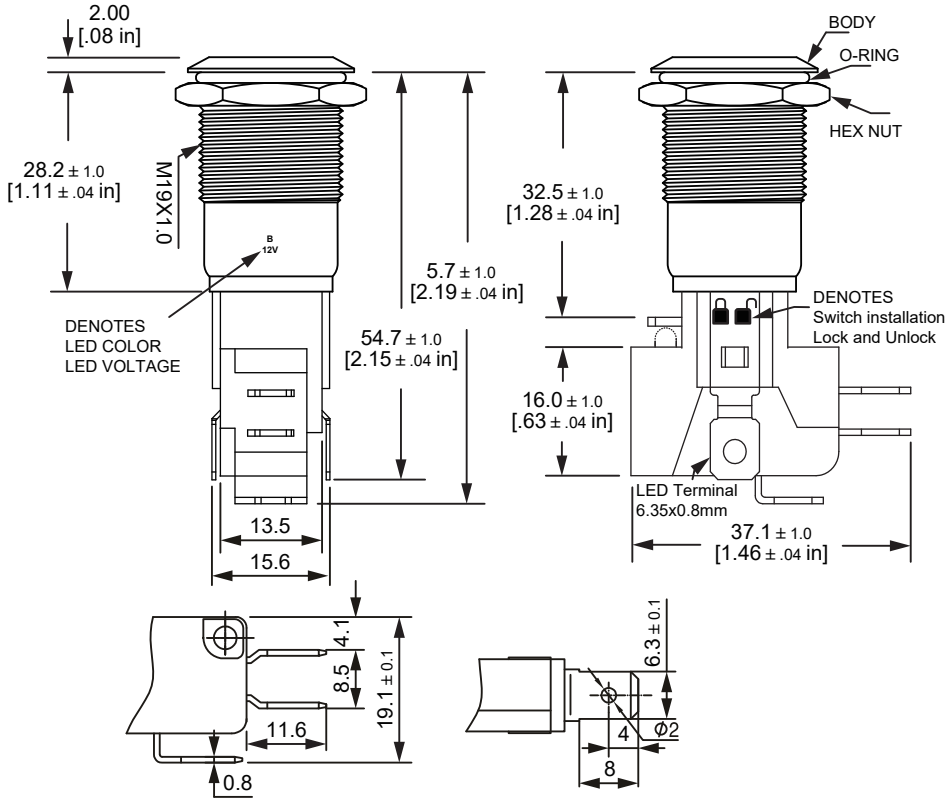

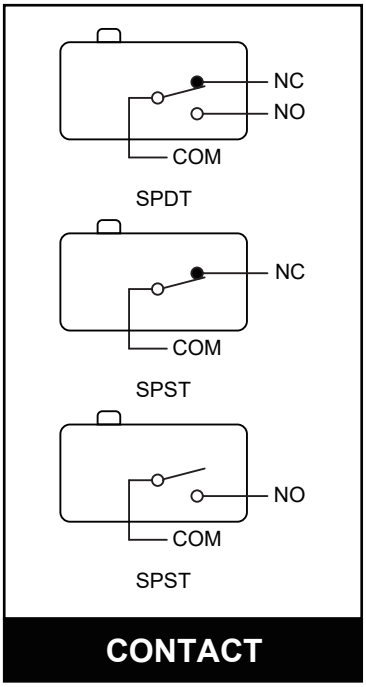

CONTACT

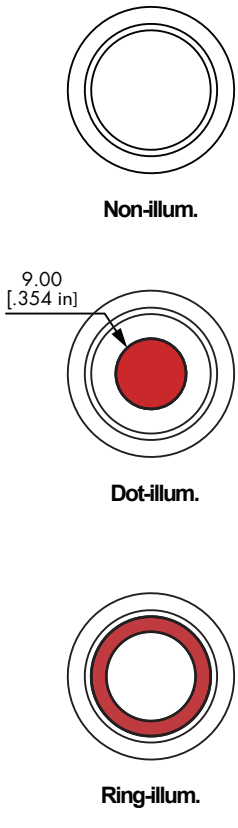

LENS OPTIONS

RoHS COMPLIANCE

High current anti vandal switch ∅19mm

Applications / Markets

Yacht Controls

Security Devices

Industrial Controls

Kiosks

Car Controls

Medical Equipment

Specifications

Electrical Rating: 21A, 24VDC
Mechanical Life: 1,000,000 Cycles
Electrical Life: 50,000 Cycles
Contact Resistance: 50mΩ Max.
Insulation Resistance: 1000 MΩ Min.
Dielectric Strength: 2,000VAC
Operating/Storage Temperature: -20°C to 55°C
Travel: 1.50mm
Moisture Protection: IP67
Actuation Force: 4N
Panel Thickness: 1-11mm
Mounting Nut Torque: 5-14Nm
LED state for output image option :
1 LED : the LED is ON when the output is closed.
2 LEDs : first color is ON when the output is open. Second color is ON when the output is closed.

Features & Benefits

- 19mm diameter panel cutout
- Backlit label kit option
- Variety LED option
- Dot, ring or backlit illumination available
- Multiple actuator options
- Pilot indicator option
- IP65 rated,
- Momentary Off-(On), Latching Off-On

Part Number Configurator

Series	Actuator Options	Terminal Options	Function Options	Rating Options	Material Options	Illumination Style Options	LED-Color Options	Illumination Voltage Options	LED Functions	Graphic (Optional)
L19Y	☐	☐	☐	☐	☐	☐	☐	☐	☐	☐
	F - Flat **H** - High	**C** - Cable*	**M** - Momentary Off-(On) **Z** - Latching Off - On	**NONE** - Max. 21A24V DC	**S** - Stainless Steel **A** - Black Anodized	**NONE** - Non-Illuminated **D** - Dot Illumination **R** - Ring Illumination **X** - Backlit Label Kit***	**NONE** - Non-Illuminated **W** - White **R** - Red **O** - Orange **G** - Green **B** - Blue **Y** - Yellow **RG** - Red/Green **RB** - Red/Blue	**NONE** - Non-Illuminated **1** - Base Voltage**	**S** - Independent **C** - Output indicator	**LE** - Laser etched

NOTES:
( ) denotes function is momentary
* Cable length 1200mm
** The base voltage for rating
*** 5 ICON labels included, 5 icon labels included, Flat actuator only

Specifications subject to change without notice

High current anti vandal switch Ø19mm

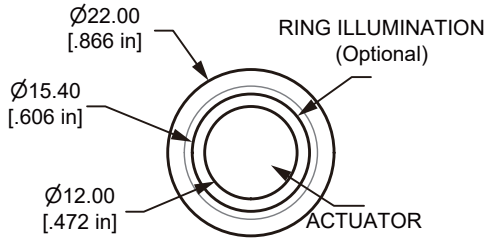

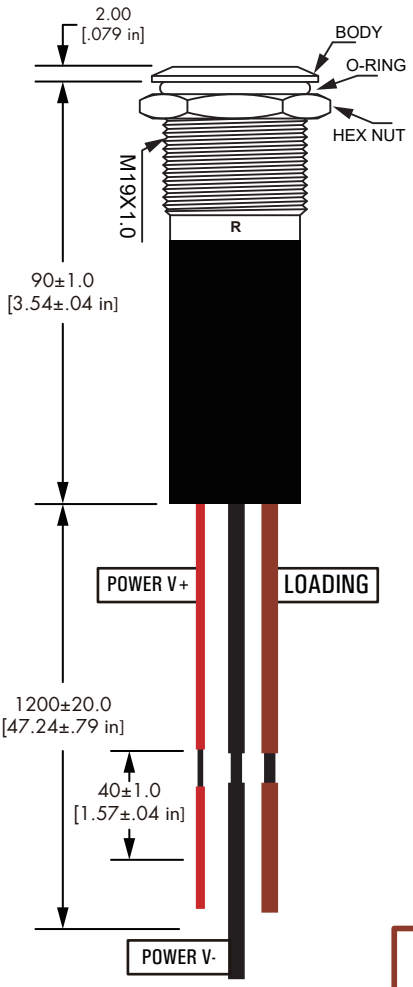

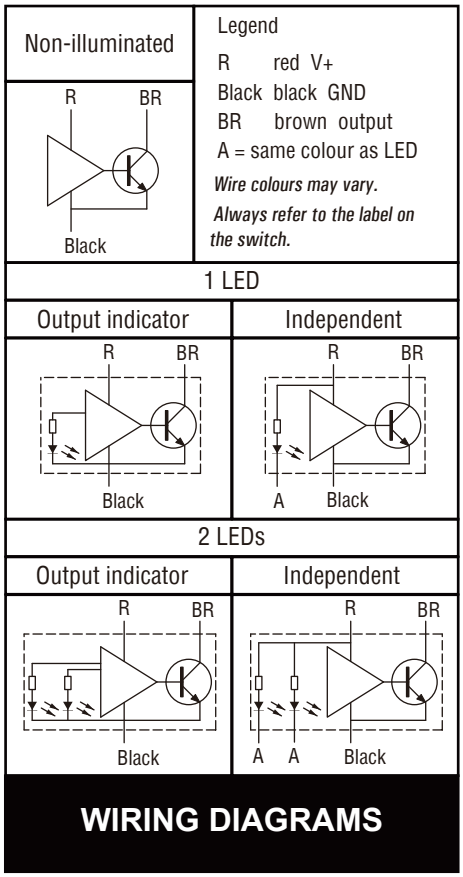

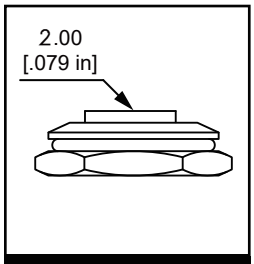

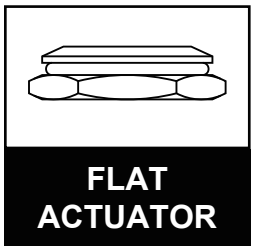

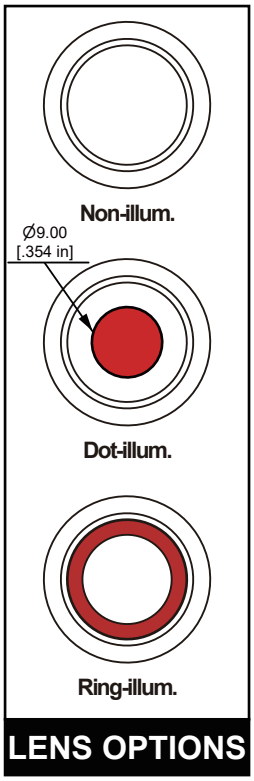

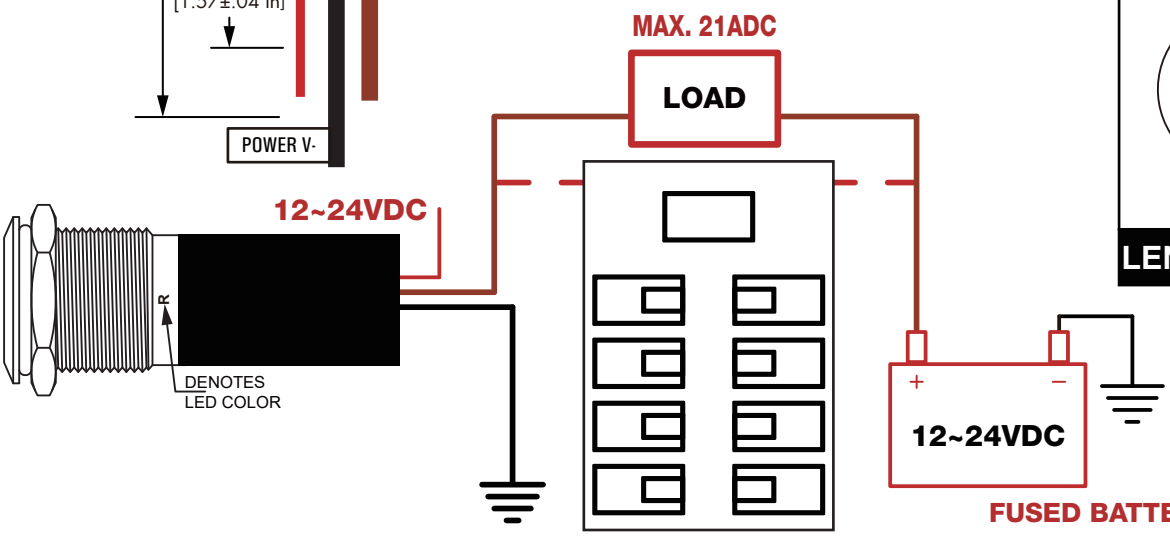

Important: Proper wiring must be followed!
Improper wiring may cause damage to switch

RoHS COMPLIANCE

Anti vandal switch ∅22mm

Applications / Markets

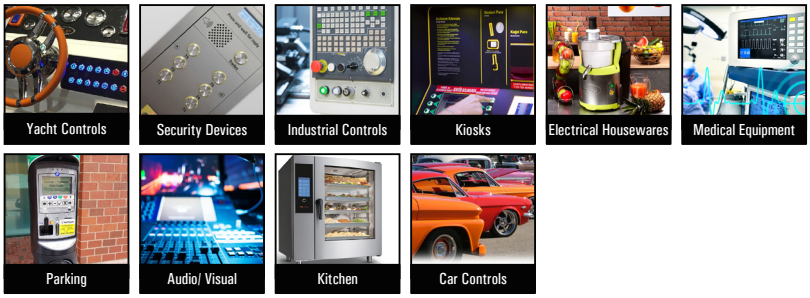

Description

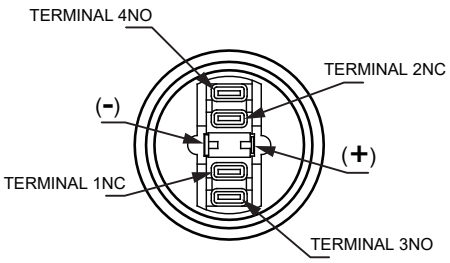

Terminals (-) and (+) used with Illum. option only

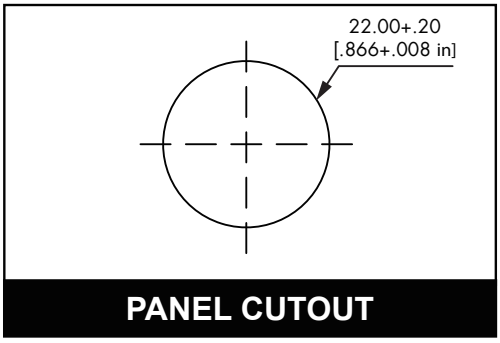

PANEL CUTOUT

Panel Thickness:
1-12mm for Alternated
1-10mm for Momentary

Order Code

Series	Actuator Options	Terminal Options	Function Options	Material Options	Illumination Style Options	Led-Color Options	Illumination Voltage Options		Graphic Options
L22	F- Flat	NONE- Solder-lug (2.8x0.5)	M- Momentary 1- 1NO1NC Z- Alternated 1- 1NO1NC	S- Stainless steel A- Anodized aluminum*	D- Dot illum. R- Ring illum. NONE- non-illum.	W- White Y- Yellow B- Blue G- Green R- Red O- Orange	NONE- Base Voltage** 3.3V 6V 12V 24V 36V 110V 220V	–	NONE- Non-marking LE- Laser etched

NOTES:
* Anodized aluminum: variety of colors(MOQ 500pcs/color), standard for black anodized
** Base voltage on LEDs:
1.8V @ 20mA for Red, Yellow and Orange LED colors
2.8V @ 20mA for Blue, Green and White LED colors

Technical Data

Type	L22-F
Illuminated Options	Non-Illuminated/ Ring Illuminated/ Dot Illuminated
Terminal	Solder lug (2.8X0.5)
Max. Switch Rating	Ith: 5A Ui: 250VAC
Contact Resistance	≤50mΩ
Insulation Resistance	≥1000mΩ
Dielectric Strength	2000VAC
Operation Temp	-20℃ ～+55℃
Mechanical Life	1,000,000 Cycles
Electrical Life	>50,000 Cycles
Contact Material	Silver Alloy
Torque	5～14Nm
Operation Pressure	approx. 8N
Protection	IP65/ IK10
Material	
Actuator	Stainless Steel/ *Anodized Aluminum
Body	Stainless Steel/ *Anodized Aluminum
Base	PA
Color	LED 3.3V/ 6V/ 12V/ 24V/ 36V/ 110V/ 220V R G Y O B W Approx. 40,000 hours

Anti vandal switch Ø22mm

Momentary

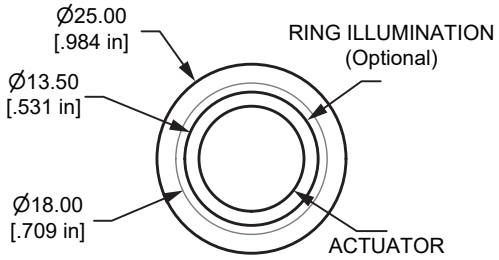

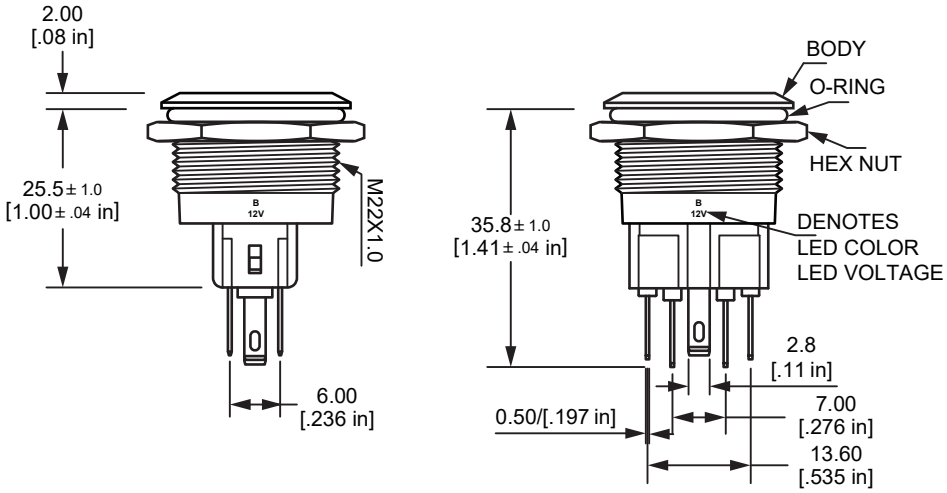

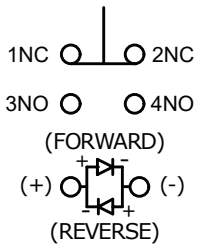

CONTACT CONFIGURATION
ILLUMINATED

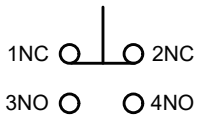

CONTACT CONFIGURATION
NON-ILLUMINATED

FUNCTIONS

Alternated

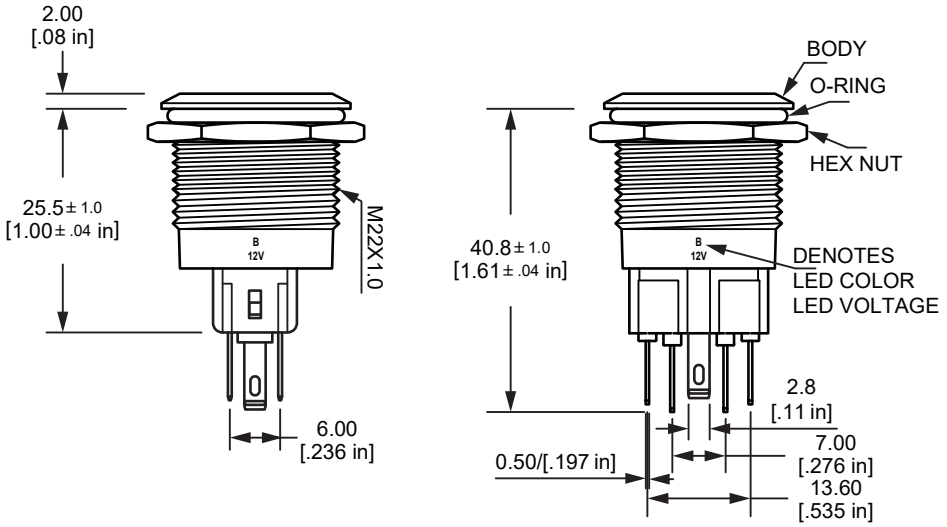

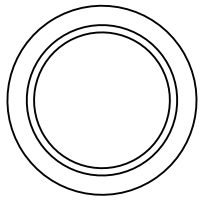

Non-illum.

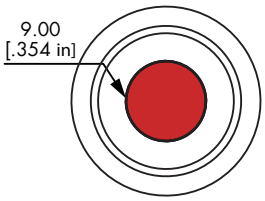

Dot-illum.

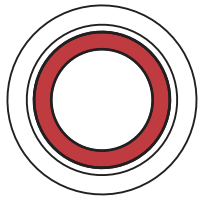

Ring-illum.

LENS OPTIONS

RoHS COMPLIANCE

Anti vandal switch Ø22mm

Applications / Markets

Yacht Controls

Security Devices

Industrial Controls

Kiosks

Electrical Housewares

Medical Equipment

Parking

Audio/ Visual

Kitchen

Car Controls

Order Code

Series	Actuator Options	Terminal Options	Function Options	Material Options	Illumination Style Options	Led-Color Options	Illumination Voltage Options		Graphic Options
L22A	F- Flat	NONE- Solder-lug (2.8x0.5) N- Screw	M- Momentary 1- 1NO1NC Z- Alternated 1- 1NO1NC	S- Stainless steel	D- Dot illum. R- Ring illum. NONE- non-illum. X- Backlit Label Kit**	W- White Y- Yellow B- Blue G- Green R- Red O- Orange	–	NONE- Base Voltage* 3.3V 6V 12V 24V 36V 110V 220V	NONE- Non-marking LE- Laser etched

NOTES:
* Base voltage on LEDs:
1.8V @ 20mA for Red, Yellow and Orange LED colors / 2.8V @ 20mA for Blue, Green and White LED colors
** 5 ICON labels included, 5 icon labels included, Flat actuator only

Technical Data

Type	L22A-F
Illuminated Options	Non-Illuminated/ Ring Illuminated/ Dot Illuminated/ Backlit
Terminal	Screw and Solder lug (2.8X0.5)
Max. Switch Rating	Ith: 5A Ui: 250VAC
Contact Resistance	≤50mΩ
Insulation Resistance	≥1000mΩ
Dielectric Strength	2000VAC
Operation Temp	-20℃ ~ +55℃
Mechanical Life	1,000,000 Cycles
Electrical Life	>50,000 Cycles
Contact Material	Silver Alloy
Torque	5 ~ 14Nm
Operation Pressure	approx. 8N
Protection	IP65/ IK10
Material	
Actuator	Stainless Steel
Body	Stainless Steel
Base	PA
Color	LED 3.3V/ 6V/ 12V/ 24V/ 36V/ 110V/ 220V R G Y O B W Approx, 40,000 hours

Description

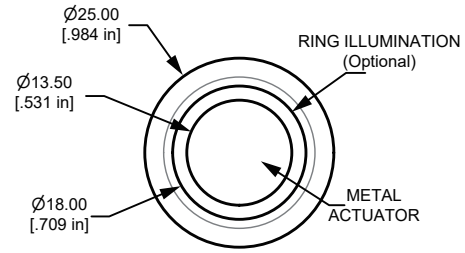

Panel Thickness:
1-10mm for Momentary
1-12mm for Alternated

Panel Cutout & Illuminated Options

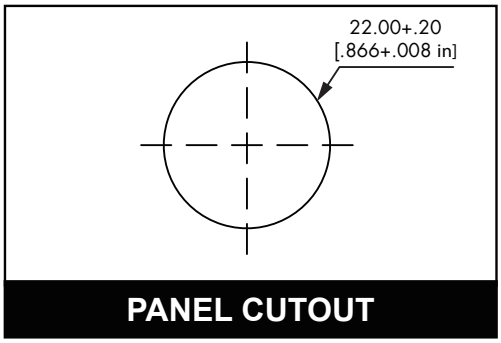

PANEL CUTOUT

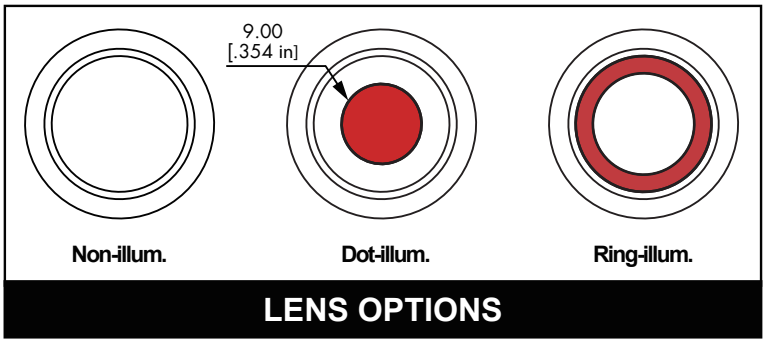

LENS OPTIONS

Anti vandal switch ∅22mm

MOMENTARY

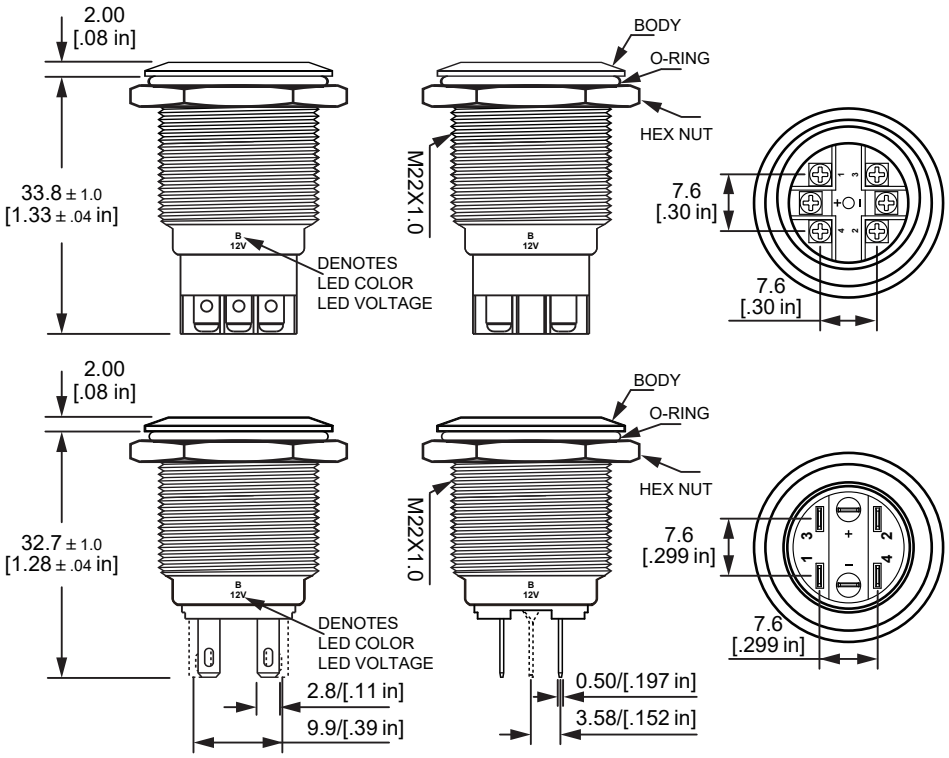

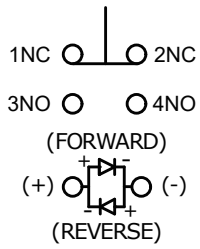

CONTACT CONFIGURATION
ILLUMINATED

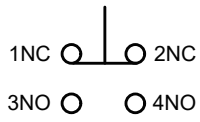

CONTACT CONFIGURATION
NON-ILLUMINATED

FUNCTIONS

ALTERNATED

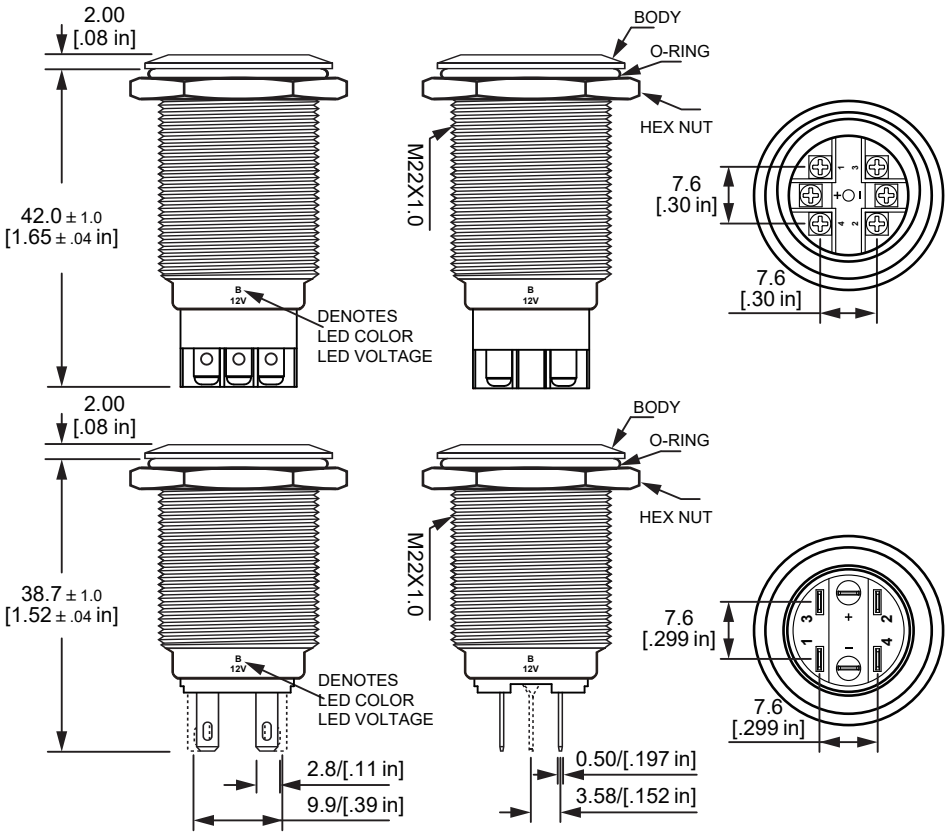

5 ICON labels included

RoHS COMPLIANCE

Micro-trip anti vandal switch ∅22mm

Applications / Markets

Yacht Controls

Security Devices

Industrial Controls

Kiosks

Electrical Housewares

Medical Equipment

Parking

Audio/ Visual

Kitchen

Car Controls

Description

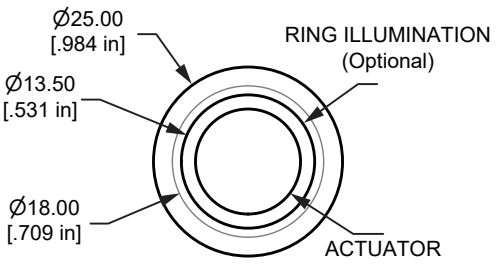

Panel Thickness: 1-10mm

Order Code

Series	Actuator Options	Terminal Options	Function Options	Material Options	Illumination Style Options	Led-Color Options	Illumination Voltage Options		Graphic Options
L22M Micro-trip	F- Flat	NONE- Solder-lug (2.8x0.5) N- Screw	M- Momentary 1- 1NO	S- Stainless steel	D- Dot illum. R- Ring illum. NONE- non-illum.	W- White Y- Yellow B- Blue G- Green R- Red O- Orange	NONE- Base voltage* 3.3V 6V 12V 24V 36V	–	NONE- Non-marking LE- Laser etched

NOTES:
* Base voltage on LEDs:
1.8V @ 20mA for Red, Yellow and Orange LED colors
2.8V @ 20mA for Blue, Green and White LED colors

Technical Data

Type	L22M-F
Illuminated Options	Non-Illuminated/ Ring Illuminated/ Dot Illuminated
Terminal	Screw and Solder lug (2.8X0.8)
Max. Switch Rating	50mA 24VDC
Contact Resistance	≤100mΩ
Insulation Resistance	≥1000mΩ
Dielectric Strength	2000VAC
Operation Temp	-20℃ ～+55℃
Mechanical Life	1,000,000 Cycles
Electrical Life	50,000 Cycles
Contact Material	Silver Alloy
Rear Nut Fixing Torque	0.57Nm
Operation Pressure	approx. 8N
Protection	IP65/ IK09
Material	
Switch Assembly	UL94V-0 Rated Polyamide (Nylon)
Tags	Copper Alloy
Terminals	Copper Alloy
Switch Body & Button	Stainless steel
Lens and Lens Body	Polycarbonate
Internal Seal	Silicone
O Ring	Nitrile
Color	LED 3.3V/ 6V/ 12V/ 24V/ 36V R G Y O B W Approx, 40,000 hours

Panel Cutout

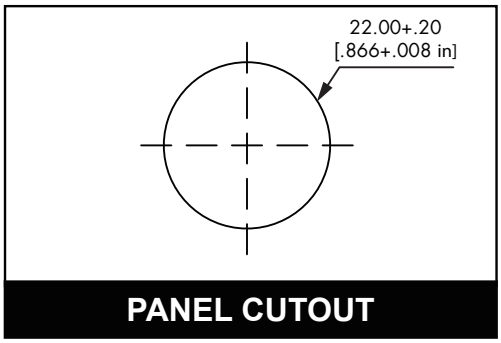

Screw Terminal

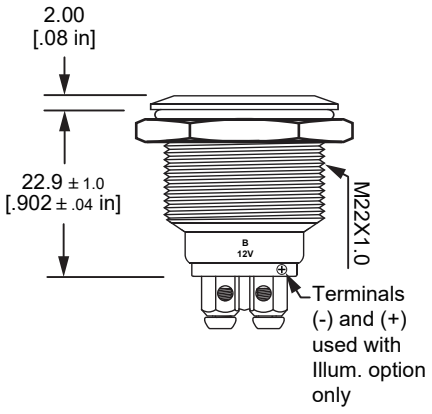

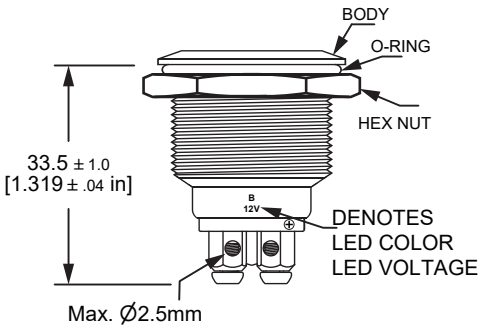

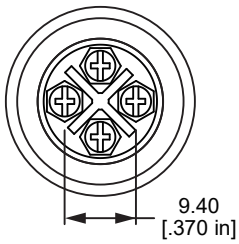

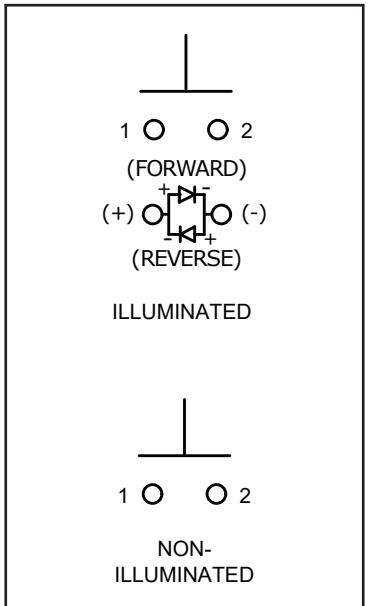

FUNCTIONS

Solder Terminal

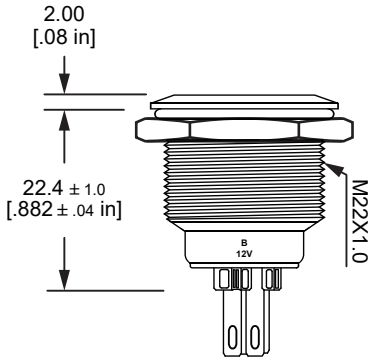

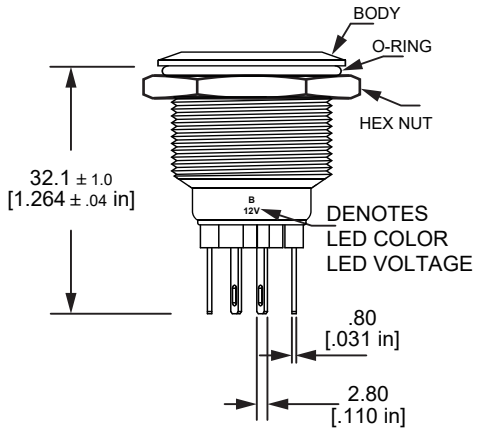

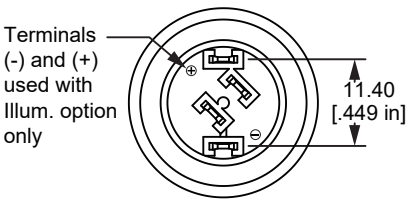

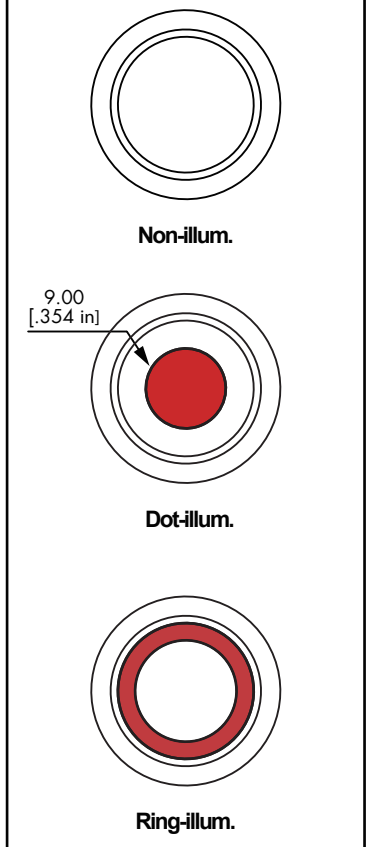

LENS OPTIONS

RoHS COMPLIANCE

High current anti vandal switch Ø22mm

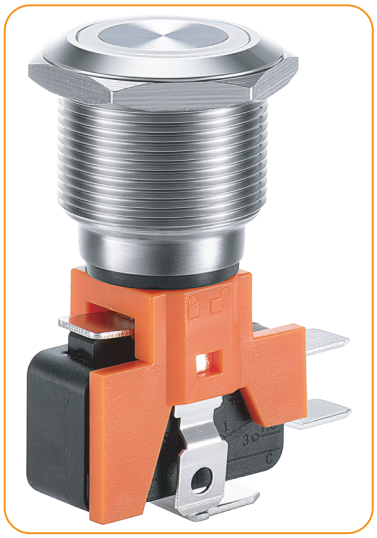

Applications / Markets

Yacht Controls

Security Devices

Industrial Controls

Kiosks

Electrical Housewares

Medical Equipment

Parking

Audio/ Visual

Kitchen

Car Controls

Order Code

Series	Actuator Options	Terminal Options	Function Options	Current Options	Material Options	Illumination Style Options	Led-Color Options	Illumination Voltage Options		Graphic Options
L22B	F- Flat	NONE- quick connect terminal (6.35X0.8)	M- Momentary 1 1NO (SPST) 2 1NC (SPST) 3 1NO1NC (SPDT) Z- Alternated 1 1NO (SPST) 2 1NC (SPST) 3 1NO1NC (SPDT)	02- 2.5A 03- 3A 05- 5A 08- 8A 10- 10A 16- 16A 21- 21A (250VAC/125VAC) D6- 0.6A/ 125VDC D3- 0.3A/ 250VDC	S- Stainless steel	D- Dot illum. R- Ring illum. NONE- non-illum.	W- White Y- Yellow B- Blue G- Green R- Red O- Orange	NONE- Base Voltage* 3.3V 6V 12V 24V 36V 110V 220V	–	NONE- Non-marking LE- Laser etched

NOTES:
* Base voltage on LEDs:
1.8V @ 20mA for Red, Yellow and Orange LED colors
2.8V @ 20mA for Blue, Green and White LED colors

Description

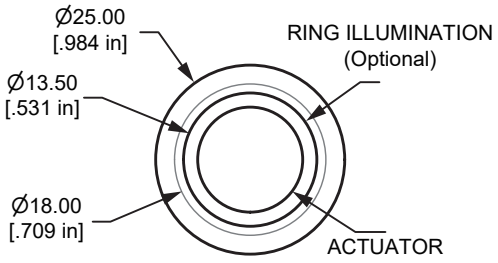

Panel Thickness: 1-12mm

Panel Cutout

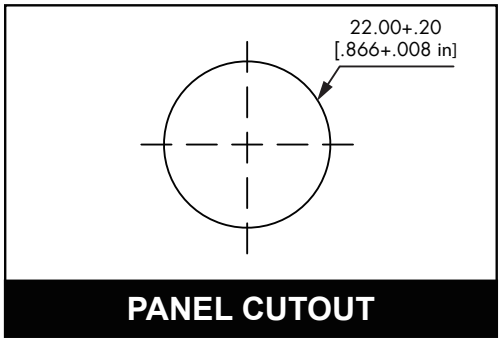

Technical Data

Type	L22B-F
Illuminated Options	Non-Illuminated/ Ring Illuminated/ Dot Illuminated
Terminal	Quick connect terminal (6.35x0.8)
Max. Switch Rating	3A 5A 8A 10A 15A(16A) 20A(21A)/ 250VAC, 125VAC 0.6A/ 125VDC 0.3A/ 250VDC
Contact Resistance	≤25mΩ
Insulation Resistance	≥100mΩ
Dielectric Strength	Between non-consecutive terminals 1,000Vrms, 50/60Hz for 1min Between non-current carrying metal parts and each terminal 1,500Vrms, 50/60Hz for 1min Between ground and each terminal 1,500Vrms, 50/60Hz for 1min
Shock resistance	Detruction: O.F.>0.5N: 1000m/s2 (approx. 100g), O.F.≤0.5N: 400m/s2 (approx. 40g) Malfunction: O.F.>0.5N: 200m/s2 (approx. 20g), O.F.≤0.5N: 100m/s2 (approx. 10g)
Vibration Resistance	10 - 50Hz, 1.5mm Double Amplitude
Ambient Temp.	-25℃ ~ +85℃
Mechanical Life	2,000,000cycles
Electrical Life	50,000cycles
Contact Material	Silver Alloy
Torque	5 ~ 14Nm
Operation Pressure	10N
Protection	IP65/ IK09
Material	
Actuator	Stainless steel
Body	Stainless steel
Color	LED 3.3V/ 6V/ 12V/ 24V/ 36V/ 110V/ 220V R G Y O B W
	Approx. 40, 000

Momentary

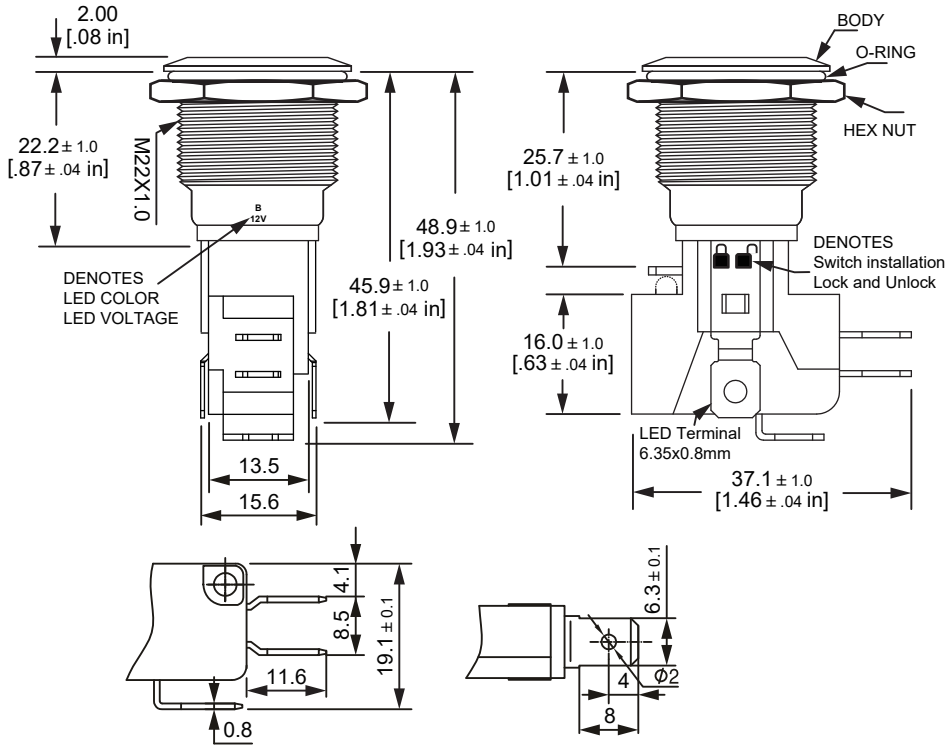

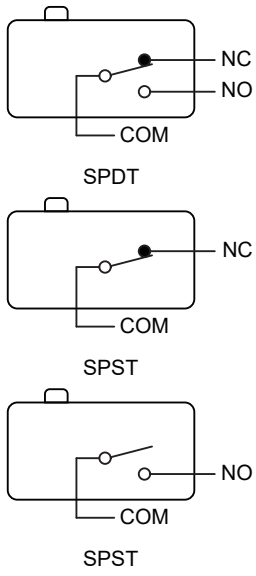

CONTACT

Alternated

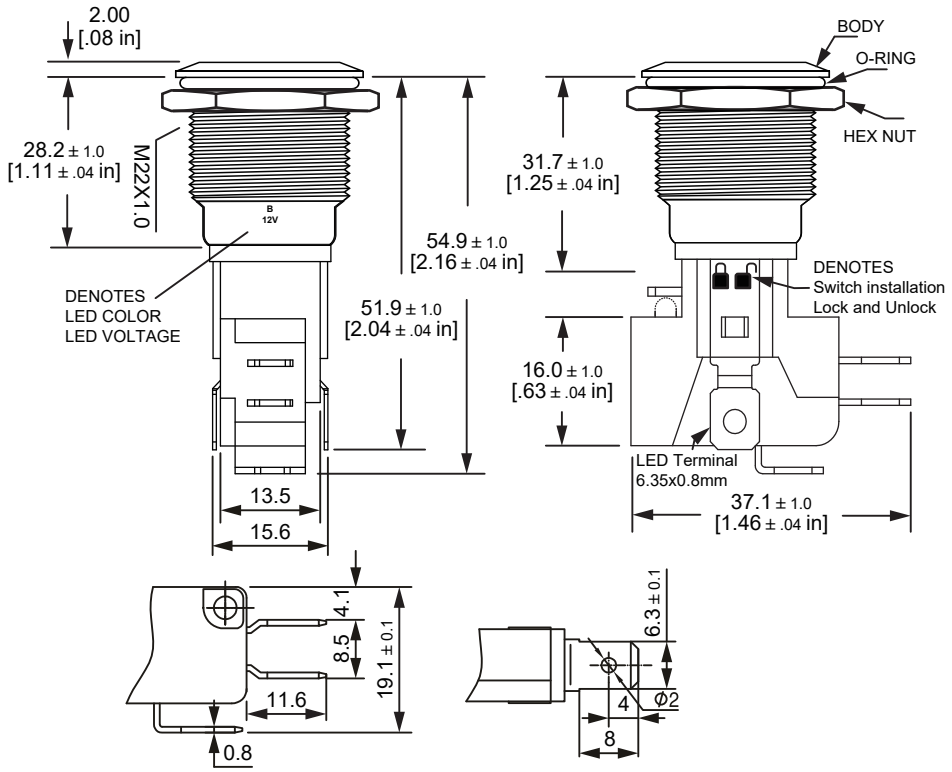

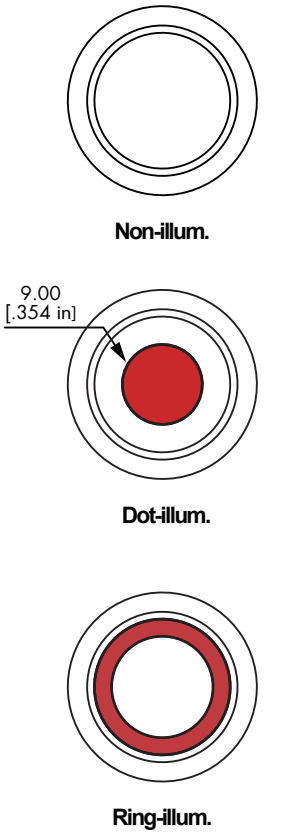

LENS OPTIONS

RoHS COMPLIANCE

Anti vandal switch ∅25mm

Applications / Markets

Yacht Controls

Security Devices

Industrial Controls

Kiosks

Electrical Housewares

Medical Equipment

Parking

Audio/ Visual

Kitchen

Car Controls

ORDER CODE

Series	Actuator Options	Terminal Options	Function Options	Material Options	Illumination Style Options	Led-Color Options	Illumination Voltage Options		Graphic Options		
L25	F- Flat	NONE- Solder-lug (2.8x0.5)	M- Momentary 1- 1NO1NC 2- 2NO2NC Z- Alternated 1- 1NO1NC 2- 2NO2NC	S- Stainless steel A- Anodized aluminum	D- Dot illum. R- Ring illum. NONE- non-illum.	W- White Y- Yellow B- Blue G- Green R- Red O- Orange	–	NONE- Base Voltage* 3.3V 6V 12V 24V 36V 110V 220V		NONE- Non-marking LE- Laser etched

NOTES:
* Base voltage on LEDs:
1.8V @ 20mA for Red, Yellow and Orange LED colors
2.8V @ 20mA for Blue, Green and White LED colors

Description

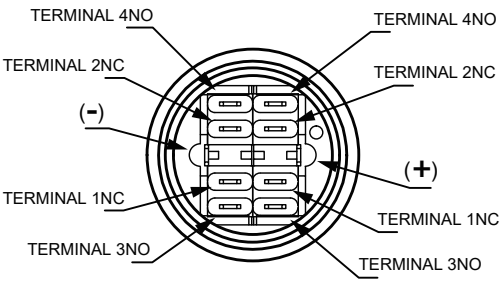

Terminals (-) and (+) used with Illum. option only

Technical Data

Type	L25-F
Illuminated Options	Non-Illuminated/ Ring Illuminated/ Dot Illuminated
Terminal	Solder lug (2.8X0.5)
Max. Switch Rating	Ith: 5A Ui: 250VAC
Contact Resistance	≤50mΩ
Insulation Resistance	≥1000mΩ
Dielectric Strength	2000VAC
Operation Temp	-20℃ ～+55℃
Mechanical Life	1,000,000 Cycles
Electrical Life	>50,000 Cycles
Contact Material	Silver Alloy
Torque	5～14Nm
Operation Pressure	approx. 8N
Protection	IK10
Material	
Actuator	Stainless Steel/ *Anodized Aluminum
Body	Stainless Steel/ *Anodized Aluminum
Base	PA
Color	LED
	3.3V/ 6V/ 12V/ 24V/ 36V/ 110V/ 220V
	R G Y O B W
	Approx, 40,000 hours

Panel Cutout & Illuminated Options

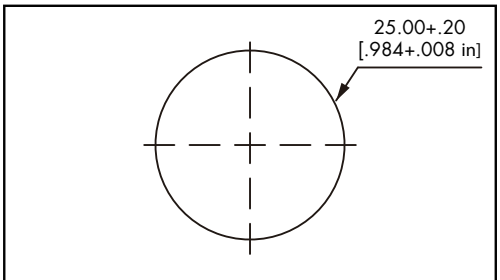

PANEL CUTOUT

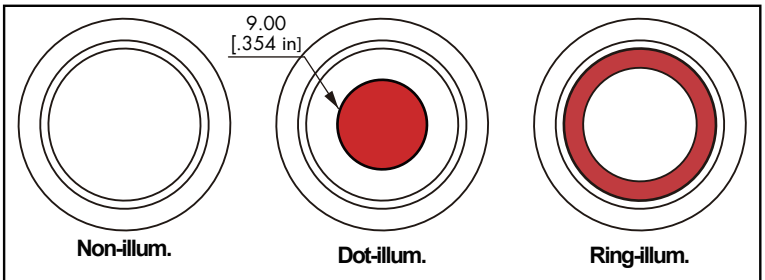

LENS OPTIONS

Anti vandal switch ∅25mm

Momentary

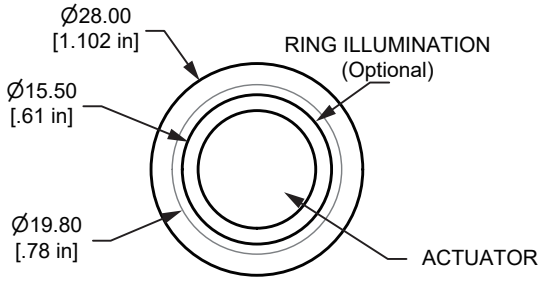

Panel Thickness:
1-10mm for Momentary
1-12mm for Maintained

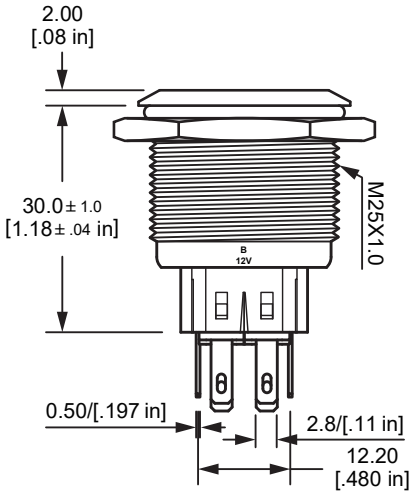

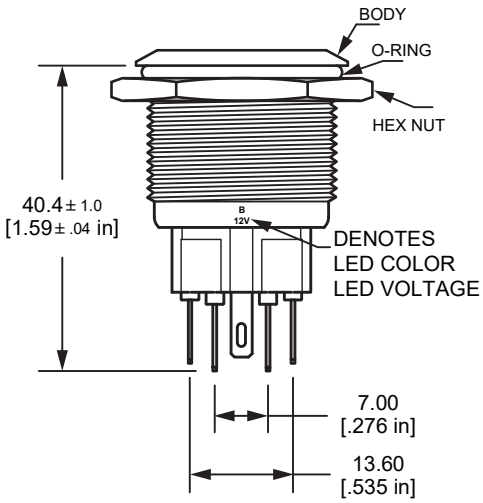

Alternated

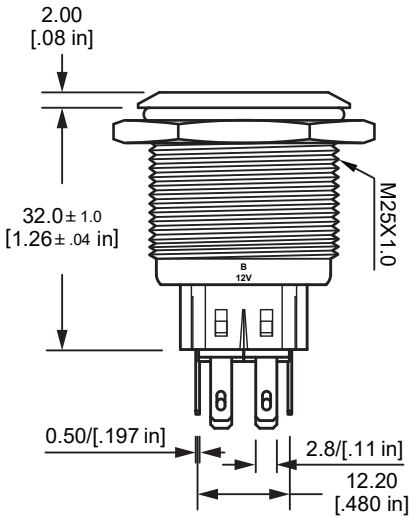

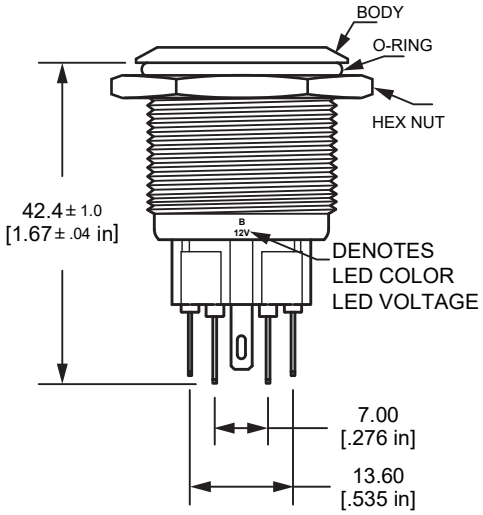

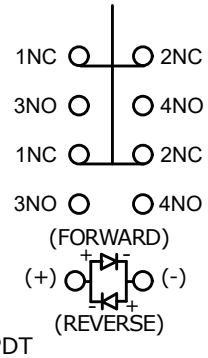

DPDT
2NO2NC ON (OFF) / OFF (ON)
CONTACT CONFIGURATION
ILLUMINATED

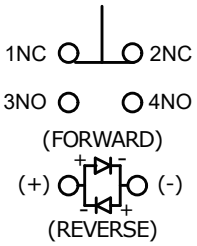

SPST
1NO1NC ON (OFF) / OFF (ON)
CONTACT CONFIGURATION
ILLUMINATED

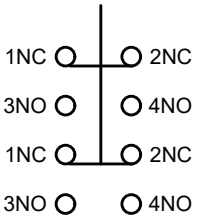

DPDT
2NO2NC ON (OFF) / OFF (ON)
CONTACT CONFIGURATION
NON-ILLUMINATED

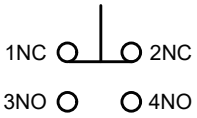

SPST
1NO1NC ON (OFF) / OFF (ON)
CONTACT CONFIGURATION
NON-ILLUMINATED

FUNCTIONS

Alarm
Indicator
Backlit label kit

RoHS COMPLIANCE

Anti vandal pilot indicator

Applications / Markets

Yacht Controls

Security Devices

Industrial Controls

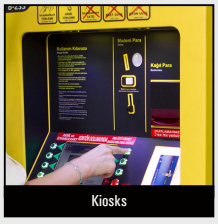
Kiosks

Electrical Housewares

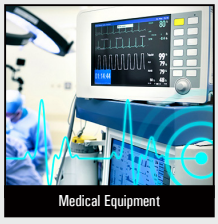
Medical Equipment

Specifications

Contact Arrangement: Lamp indicator
Operating/Storage Temperature: -25°C to 55°C
Lamp Life: 40,000 Hours Nominal
Ingress Protection: IP67
Panel Thickness: 1-6mm or 1-10mm, (depending on mounting diameter)
Mounting Nut Torque: 5-14Nm

Features & Benefits

- **Pilot indicator light**
- **Multiple panel cutout sizes: 6mm to 19mm dia.**
- **Multiple illumination voltage options**
- **Multiple LED color options**
- **IP67 rated**

Part Number Configurator

Series	Indicator Diameter	Lens	Illumination Style Options	Material Options	Led-Color Options	Illumination Voltage Options
PI	06- 6mm Dia.	F- Flat	D- Dot illum.	S- Stainless steel	W- White	NONE- Base voltage**
PV*	08- 8mm Dia.	C- Chamfer	R- Ring illum.	N- Nickel plated brass	Y- Yellow	3.3V
	10- 10mm Dia.				B- Blue	6V
	12- 12mm Dia.				G- Green	12V
	14- 14mm Dia.				R- Red	24V
	16- 16mm Dia.				O- Orange	36V
	19- 19mm Dia.					110V

NOTES:
* PV: only 8mm and 12mm
** Base voltage on LEDs: 1.8V @ 20mA for Red, Yellow and Orange LED colors / 2.8V @ 20mA for Blue, Green and White LED colors

Specifications subject to change without notice

DIMENSIONS

PI06

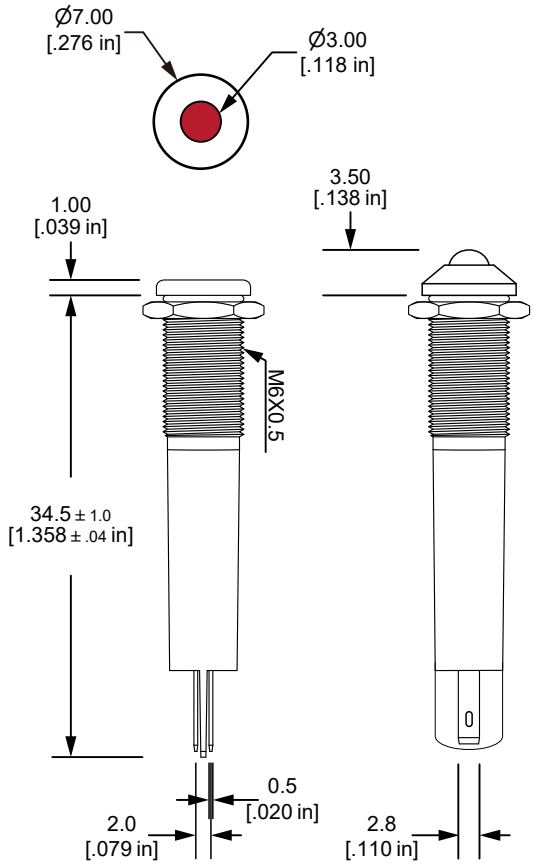

FLAT **CHAMFER**

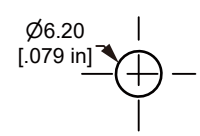

Panel Thickness:
1 ~ 6mm

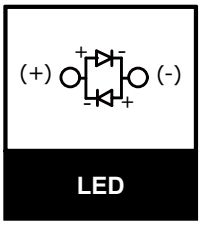

PI08

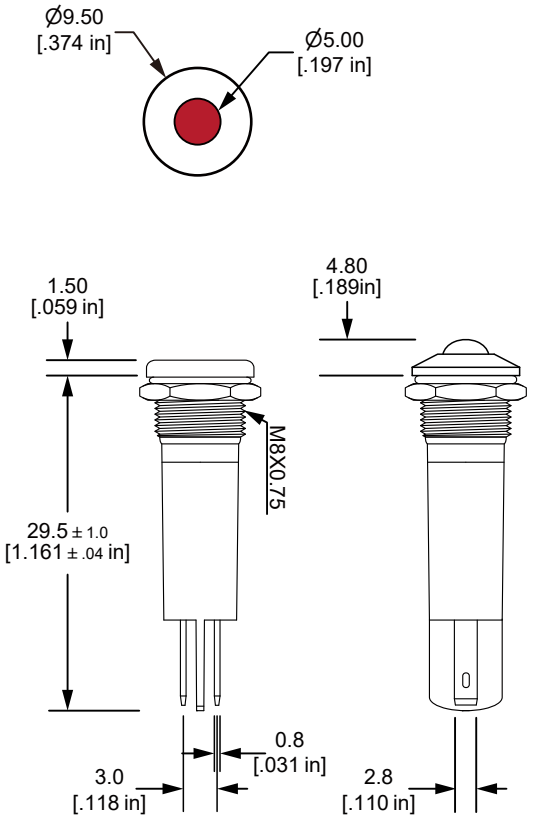

FLAT **CHAMFER**

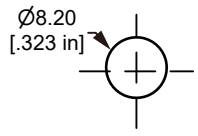

Panel Thickness:
1 ~ 6mm

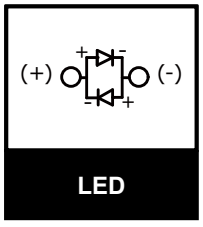

Anti vandal pilot indicator

DIMENSIONS

PV8

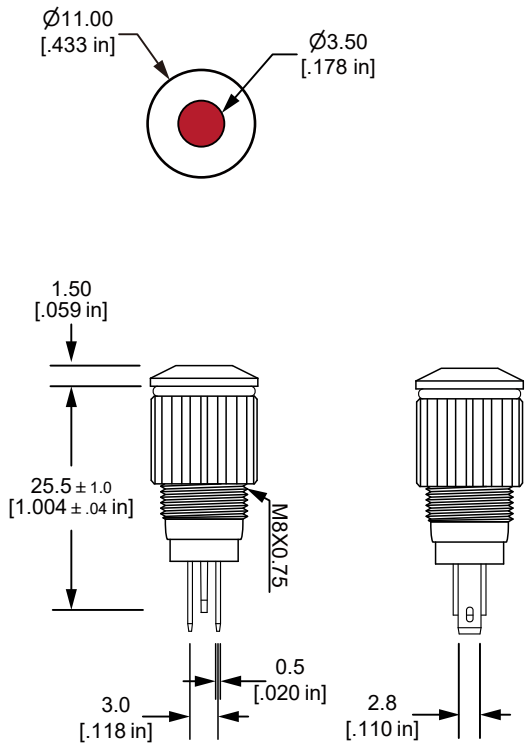

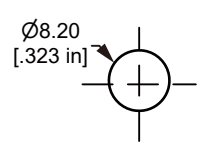

Panel Thickness:
1 ~ 6mm

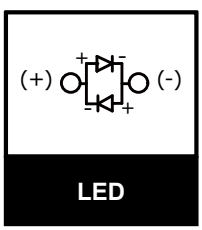

PI10

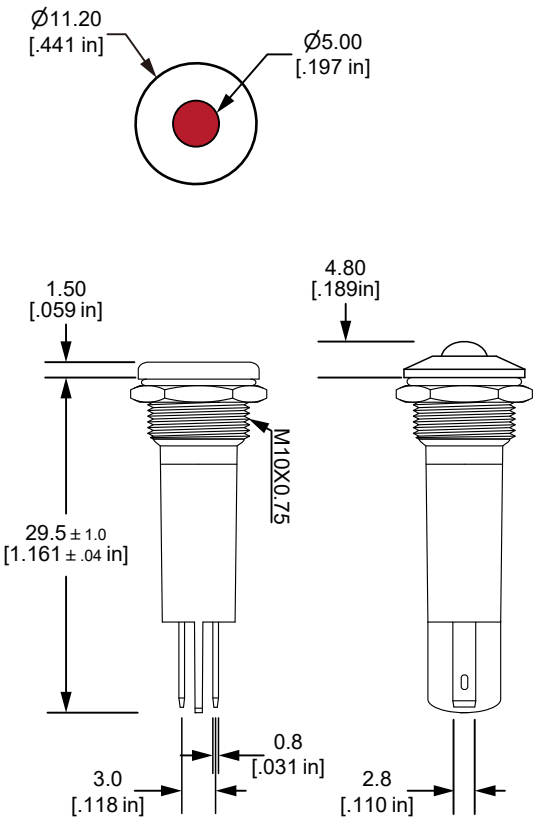

FLAT **CHAMFER**

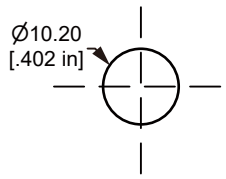

Panel Thickness:
1 ~ 6mm

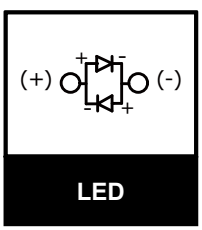

DIMENSIONS

PI12

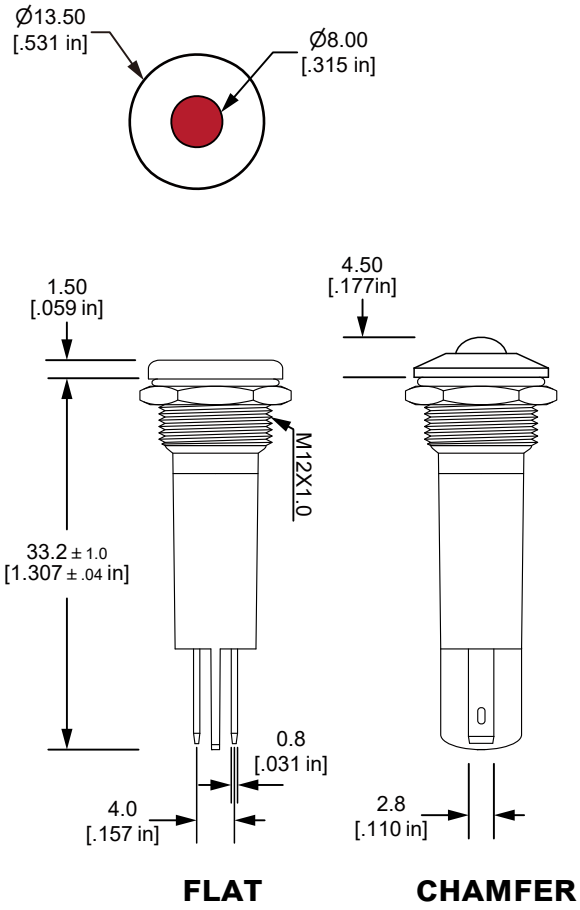

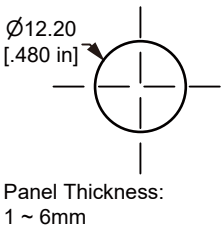

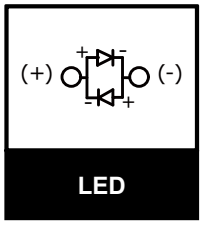

PV12

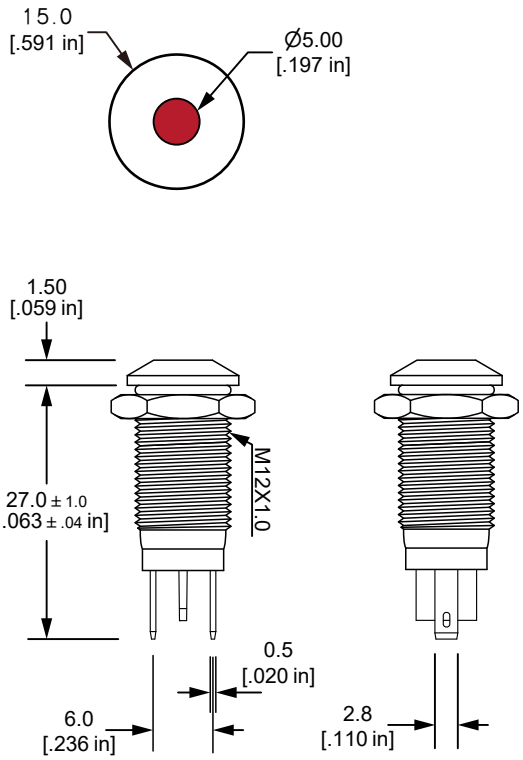

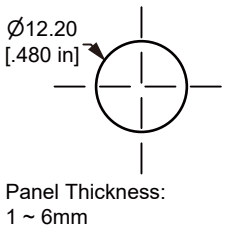

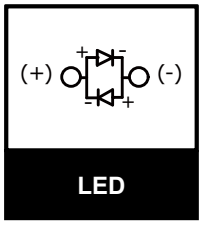

Anti vandal pilot indicator

DIMENSIONS

PI14

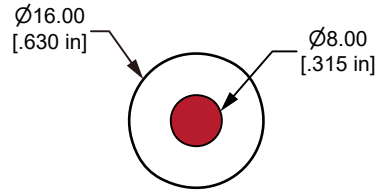

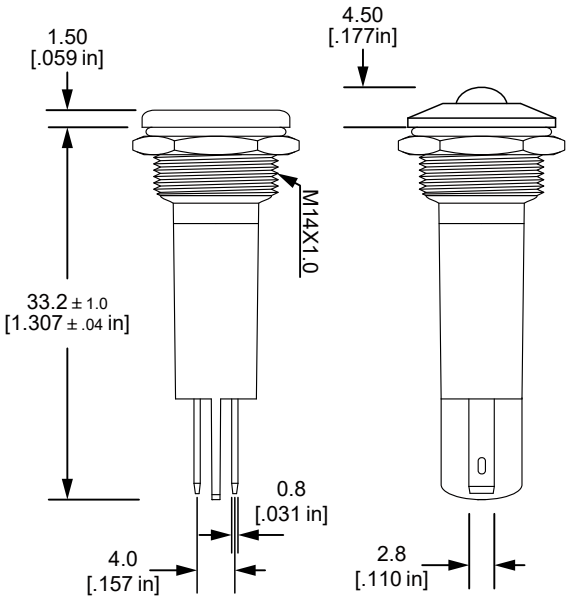

FLAT **CHAMFER**

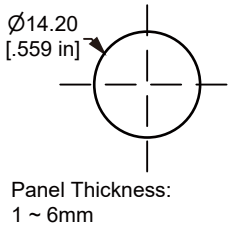

Panel Thickness:
1 ~ 6mm

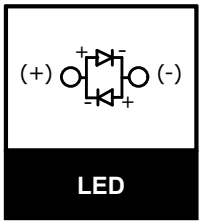

PI16

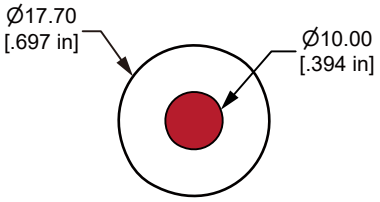

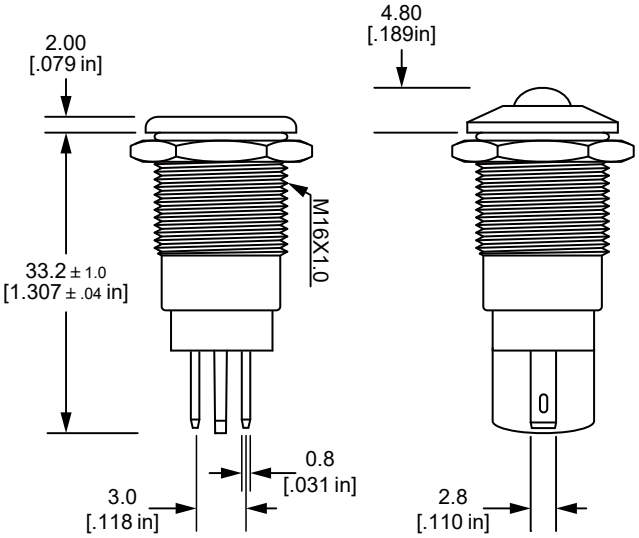

FLAT **CHAMFER**

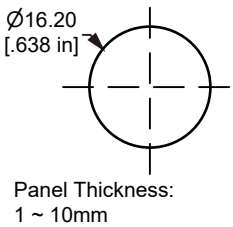

Panel Thickness:
1 ~ 10mm

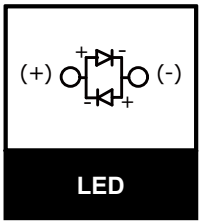

DIMENSIONS

PI19

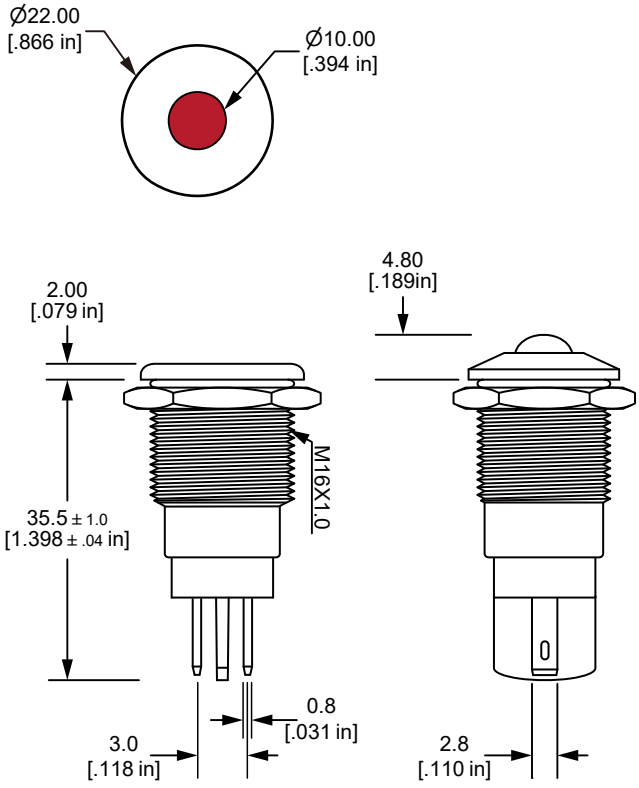

FLAT **CHAMFER**

FLAT **CHAMFER**

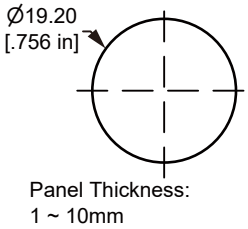

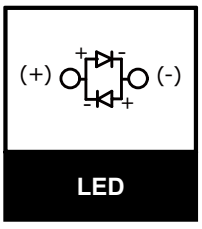

RoHS COMPLIANCE

Buzzer

Applications / Markets

Yacht Controls

Security Devices

Industrial Controls

Kiosks

Electrical Housewares

Medical Equipment

Parking

Audio/ Visual

Kitchen

Car Controls

Order Code

Series	Function Options	Terminal Options	Material Options	Illumination Style Options	Led-Color Options	Illumination Voltage Options
Lf19	**NONE**- Buzzer flashing and non-illum. **F**- Flicker buzzer **A**- Alternately flashing color **C**- LED close when buzzer pause **H**- LED always lighting when buzzer pause **S**- Bi-color LED strobe, the buzzer call in slow **The function can be customized**	**NONE**- Screw	**NONE**- Stainless steel	**NONE**- Ring illum.	**W**- White **Y**- Yellow **B**- Blue **G**- Green **R**- Red	12V 24V

Remark:
'A' standard color for Red and Green
'C' standard color for Red
'S' standard color for Red and Blue

Technical Data

Type	Lf19	Lf19-F
Function	Buzzer	Flicker Buzzer
Terminal	Screw	
Max. Switch Rating	--	
Contact Resistance	--	
Insulation Resistance	--	
Dielectric Strength	2000VAC	
Operation Temp	-20℃ ～+55℃	
Mechanical Life	--	
Electrical Life	--	
Contact Material	--	
Torque	5～14Nm	
Operation Pressure	--	
Protection	IP50, IK04	
Material	--	
Actuator	Stainless	
Body	Stainless Steel	
Base	PA	
Buzzer Spec.		
Type	Buzzer	Flicker Buzzer
Voltage	DC12V/ DC24V	
Color	--	R G Y B W
Sound Inten	≥80dB(0.1m)	

Dimensions

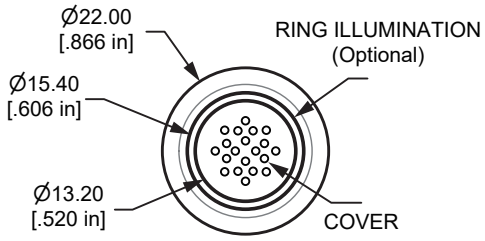
Ø22.00
[.866 in]
RING ILLUMINATION
(Optional)
Ø15.40
[.606 in]
Ø13.20
[.520 in]
COVER

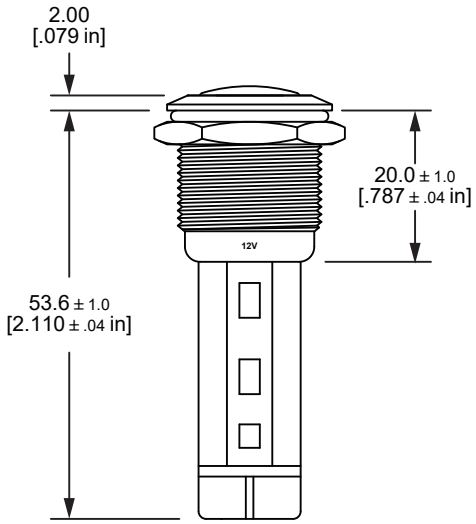
2.00
[.079 in]
20.0 ± 1.0
[.787 ± .04 in]
53.6 ± 1.0
[2.110 ± .04 in]
12V

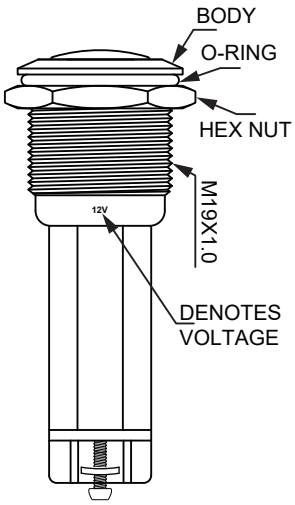
BODY
O-RING
HEX NUT
M19X1.0
DENOTES
VOLTAGE
12V

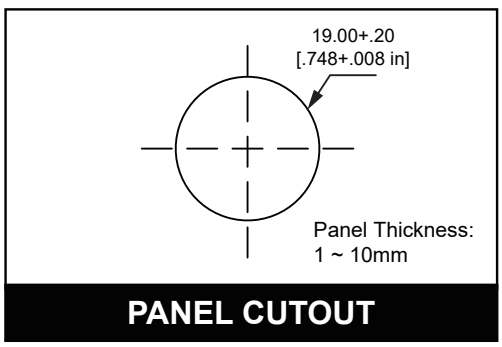
19.00+.20
[.748+.008 in]
Panel Thickness:
1 ~ 10mm
PANEL CUTOUT

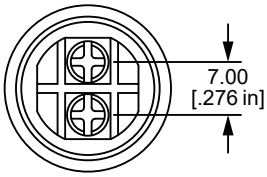
7.00
[.276 in]

Backlit
Trip-color
Rear mounting
Multiple function options

RoHS COMPLIANCE

Anti vandal switch Ø16mm

Applications / Markets

Description

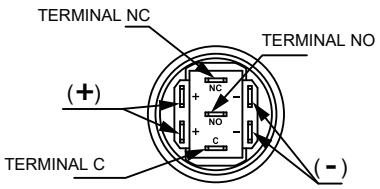

C = Common
NO = Normally open
NC = Normally closed

Terminals (-) and (+) used with Illum. option only

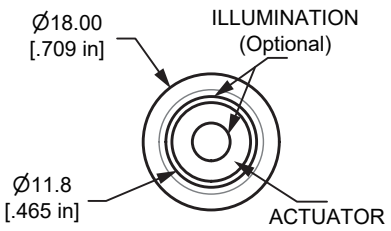

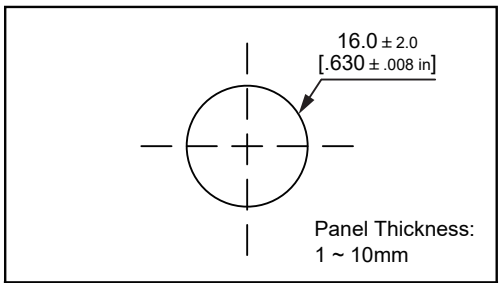

PANEL CUTOUT

5 ICON labels included

Order Code

Series	Actuator Options	Terminal Options	Function Options	Material Options	Illumination Style Options	Led-Color Options	Illumination Voltage Options	Graphic Options
L16T	F- Flat H- Raised	NONE- Solder-lug (2.8x0.5)	M- Momentary 1- 1NO1NC Z- Latching 1- 1NO1NC	S- Stainless steel N- Nickel plated brass A- Anodized aluminum	D- Dot illum. R- Ring illum. NONE- non-illum. PS- Power backlit symbol PY- Ring illum. & Power backlit symbol X- Backlit Label Kit**	W- White Y- Yellow B- Blue G- Green R- Red 3A- Red/ Green/ Blue	NONE- Base Voltage* 3.3V 6V 12V 24V 36V 110V 220V	NONE- Non-marking LE- Laser etched

NOTES:
* Base voltage on LEDs:
1.8V @ 20mA for Red and Yellow LED colors
2.8V @ 20mA for Blue, Green and White LED colors
** 5 ICON labels included, 5 icon labels included, Flat actuator only

Technical Data

Type	L16T-F/ L16T-H
Illuminated Type	Non-Illuminated/ Ring Illuminated/ Dot Illuminated/ Backlit
Terminal	Solder lug (1.8X0.4)
Max.Switch Rating	Ith: 3A Ui: 250VAC
Contact Resistance	≤50mΩ
Insulation Resistance	≥1000mΩ
Dielectric Strength	2000VAC
Operation Temp.	-20℃ ~ +55℃
Mechanical Life	500,000 Cycles
Electrical Life	30,000 Cycles
Contact Material	Silver Alloy
Torque	5 ~ 14Nm
Operation Pressure	approx. 3 ~ 5N
Protection	IP65/ IK09
Material	
Button	Stainless steel/ Nickel plated brass/ Anodized aluminum
Bodey	Stainless steel/ Nickel plated brass/ Anodized aluminum
Base	PBT
Color	LED 3.3V/ 6V/ 12V/ 24V/ 36V/ 110V/ 220V R G Y B W Approx, 40,000 hours

Anti vandal switch ∅16mm

Dimensions

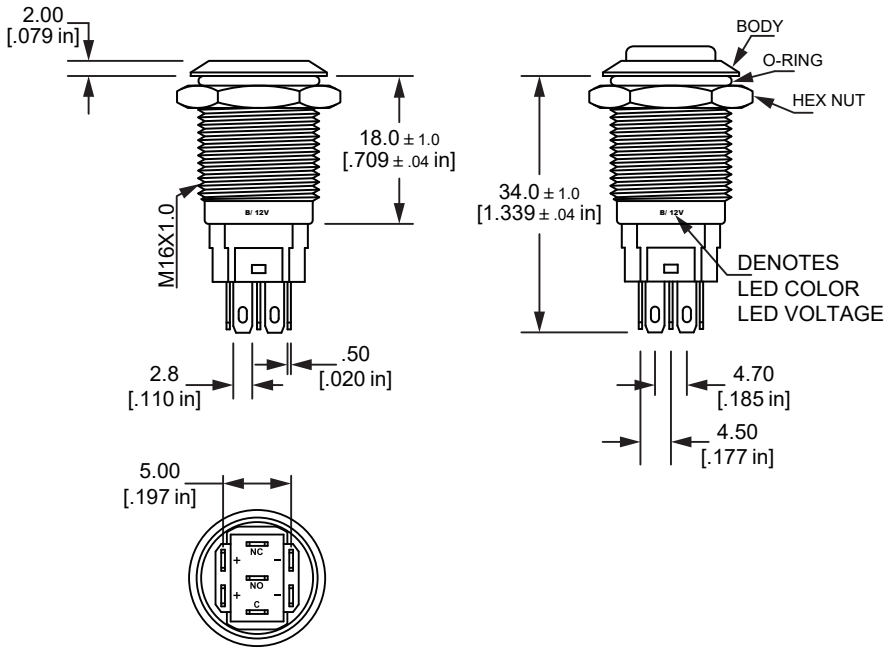

PS

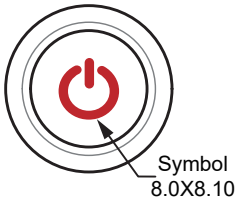

SYMBOL ILLUM.

PY

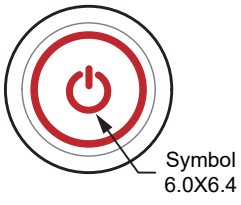

RING ILLUM. & SYMBOL ILLUM.

Actuator Options

ACTUATOR OPTIONS

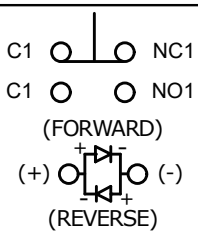

SPDT ILLUM.

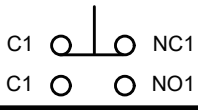

SPDT NON-ILLUM.

Illum. Options

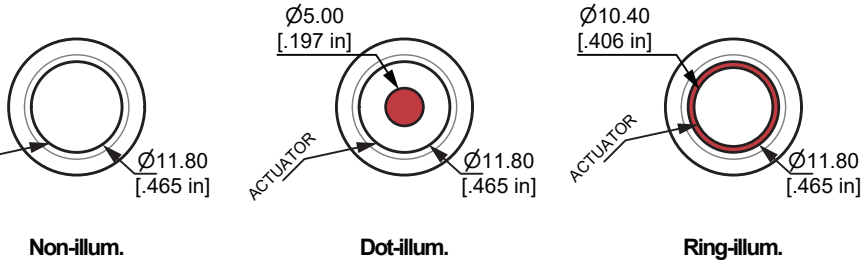

LENS OPTIONS

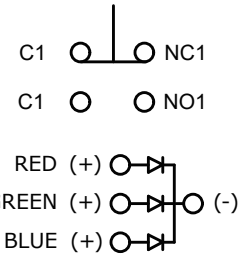

SPDT RGB COLOR

RoHS COMPLIANCE

Anti vandal switch ∅19mm

Applications / Markets

Description

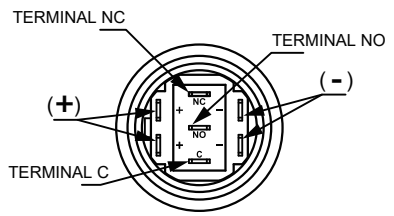

C = Common
NO = Normally open
NC = Normally closed

Terminals (-) and (+) used with Illum. option only

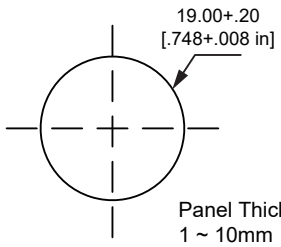

PANEL CUTOUT

5 ICON labels included

Order Code

Series	Actuator Options	Terminal Options	Function Options	Material Options	Illumination Style Options	Led-Color Options	Illumination Voltage Options	Graphic Options
L19T	F- Flat	NONE- Solder-lug (2.8x0.5)	M- Momentary 1- 1NO1NC Z- Alternated 1- 1NO1NC	S- Stainless steel A- Anodized aluminum	D- Dot illum. R- Ring illum. NONE- non-illum. PS- Power backlit symbol PY- Ring illum. & Power backlit symbol X- Backlit Label Kit**	W- White Y- Yellow B- Blue G- Green R- Red 3A- Red/ Green/ Blue	NONE- Base Voltage* 3.3V 6V 12V 24V 36V 110V 220V	NONE- Non-marking LE- Laser etched

NOTES:
* Base voltage on LEDs:
1.8V @ 20mA for Red and Yellow LED colors
2.8V @ 20mA for Blue, Green and White LED colors
** 5 ICON labels included, 5 icon labels included, Flat actuator only

Technical Data

Type	L19T-F
Illuminated Options	Non-Illuminated/ Ring Illuminated/ Dot Illuminated/ Backlit
Terminal	Solder lug (2.8X0.5)
Max. Switch Rating	Ith: 3A Ui: 250VAC
Contact Resistance	≤50mΩ
Insulation Resistance	≥1000mΩ
Dielectric Strength	2000VAC
Operation Temp	-20℃ ~ +55℃
Mechanical Life	500,000 Cycles
Electrical Life	30,000 Cycles
Contact Material	Silver Alloy
Torque	5 ~ 14Nm
Operation Pressure	approx. 5N
Protection	IP65/ IK10
Material	
Actuator	Stainless steel/ Anodized aluminum
Body	Stainless steel/ Anodized aluminum
Base	PBT
Color	LED 3.3V/ 6V/ 12V/ 24V/ 36V/ 110V/ 220V R G Y B W Approx, 40,000 hours

Anti vandal switch Ø19mm

Momentary

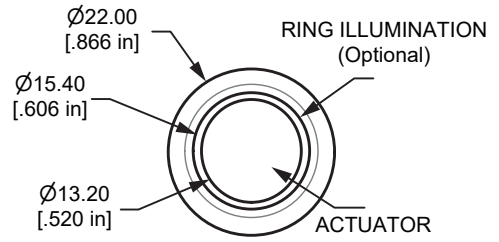

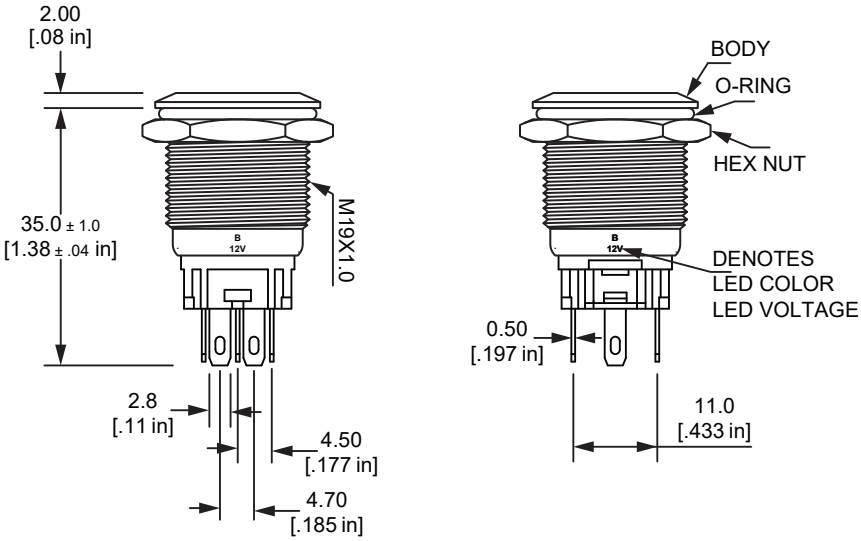

PS

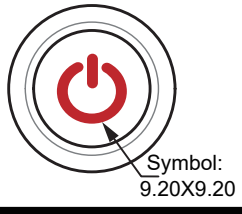

SYMBOL ILLUM.

PY

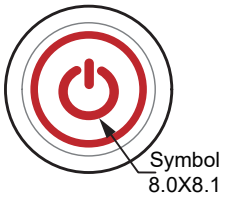

RING ILLUM. & SYMBOL ILLUM.

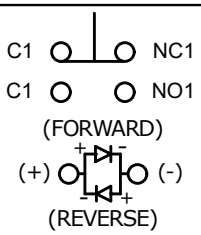

SPDT ILLUM.

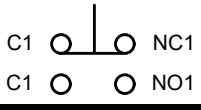

SPDT NON-ILLUM.

Illum. Options

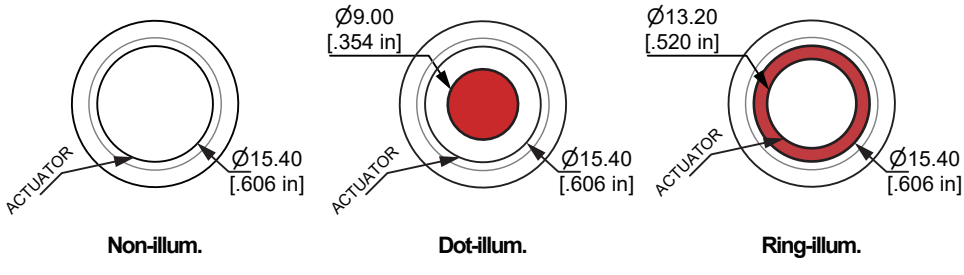

LENS OPTIONS

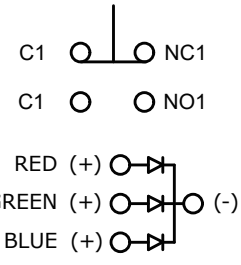

SPDT RGB COLOR

RoHS COMPLIANCE

Anti vandal switch Ø22mm

Applications / Markets

Description

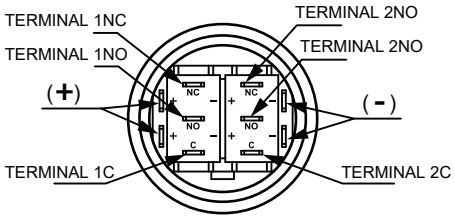

C = Common
NO = Normally open
NC = Normally closed

Terminals (-) and (+) used with Illum. option only

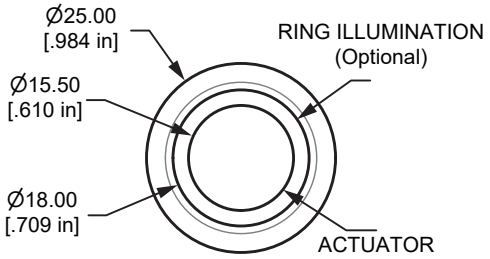

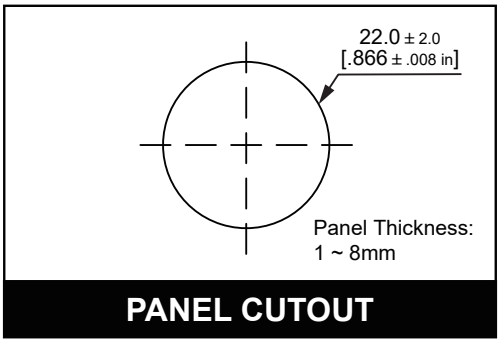

PANEL CUTOUT

5 ICON labels included

Order Code

Series		Actuator Options	Terminal Options	Function Options	Material Options	Illumination Style Options	Led-Color Options	Illumination Voltage Options	Graphic Options
L22T		F- Flat H- Raised	NONE- Solder-lug (2.8x0.5)	M- Momentary 1- 1NO1NC 2- 2NO2NC Z- Latching 1- 1NO1NC 2- 2NO2NC	S- Stainless steel A- Anodized aluminum	D- Dot illum. R- Ring illum. NONE- non-illum. PS- Power backlit symbol PY- Ring illum. & Power backlit symbol X- Backlit Label Kit**	W- White Y- Yellow B- Blue G- Green R- Red 3A- Red/ Green/ Blue	NONE- Base Voltage* 3.3V 6V 12V 24V 36V 110V 220V	NONE- Non-marking LE- Laser etched

NOTES:
* Base voltage on LEDs:
1.8V @ 20mA for Red and Yellow LED colors
2.8V @ 20mA for Blue, Green and White LED colors
** 5 ICON labels included, 5 icon labels included, Flat actuator only

Technical Data

Type	L22T-F/ L22T-H
Illuminated Type	Non-Illuminated/ Ring Illuminated/ Dot Illuminated/ Backlit
Terminal	Solder lug (1.8X0.4)
Max.Switch Rating	Ith: 3A Ui: 250VAC
Contact Resistance	≤50mΩ
Insulation Resistance	≥1000mΩ
Dielectric Strength	2000VAC
Operation Temp.	-20℃ ~ +55℃
Mechanical Life	500,000 Cycles
Electrical Life	30,000 Cycles
Contact Material	Silver Alloy
Torque	5 ~ 14Nm
Operation Pressure	approx. 3 ~ 5N
Protection	IP65/ IK09
Material	
Button	Stainless steel/ Anodized aluminum
Bodey	Stainless steel/ Anodized aluminum
Base	PBT
Color	LED 3.3V/ 6V/ 12V/ 24V/ 36V/ 110V/ 220V R G Y B W
	Approx, 40,000 hours

Actuator Options

ACTUATOR OPTIONS

Illum. Options

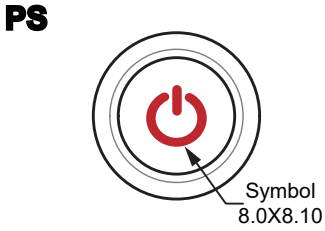

SYMBOL ILLUM.

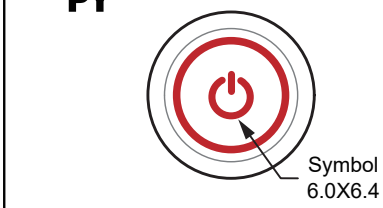

RING ILLUM. & SYMBOL ILLUM.

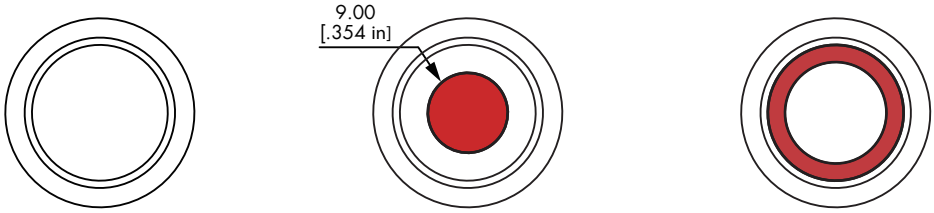

LENS OPTIONS

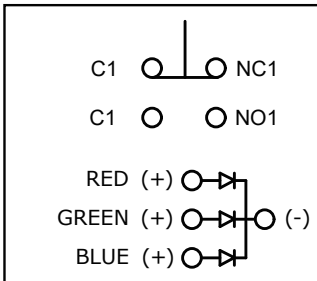

SPDT RGB COLOR

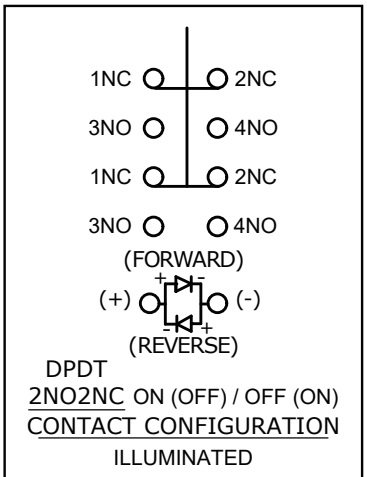

DPDT
2NO2NC ON (OFF) / OFF (ON)
CONTACT CONFIGURATION
ILLUMINATED

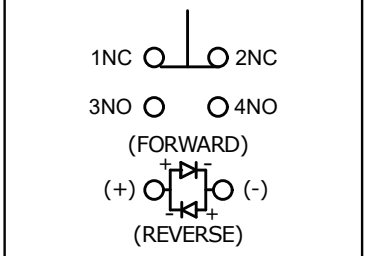

SPST
1NO1NC ON (OFF) / OFF (ON)
CONTACT CONFIGURATION
ILLUMINATED

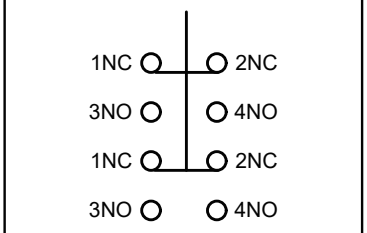

DPDT
2NO2NC ON (OFF) / OFF (ON)
CONTACT CONFIGURATION
NON-ILLUMINATED

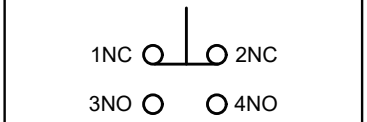

SPST
1NO1NC ON (OFF) / OFF (ON)
CONTACT CONFIGURATION
NON-ILLUMINATED

FUNCTIONS

Dimensions

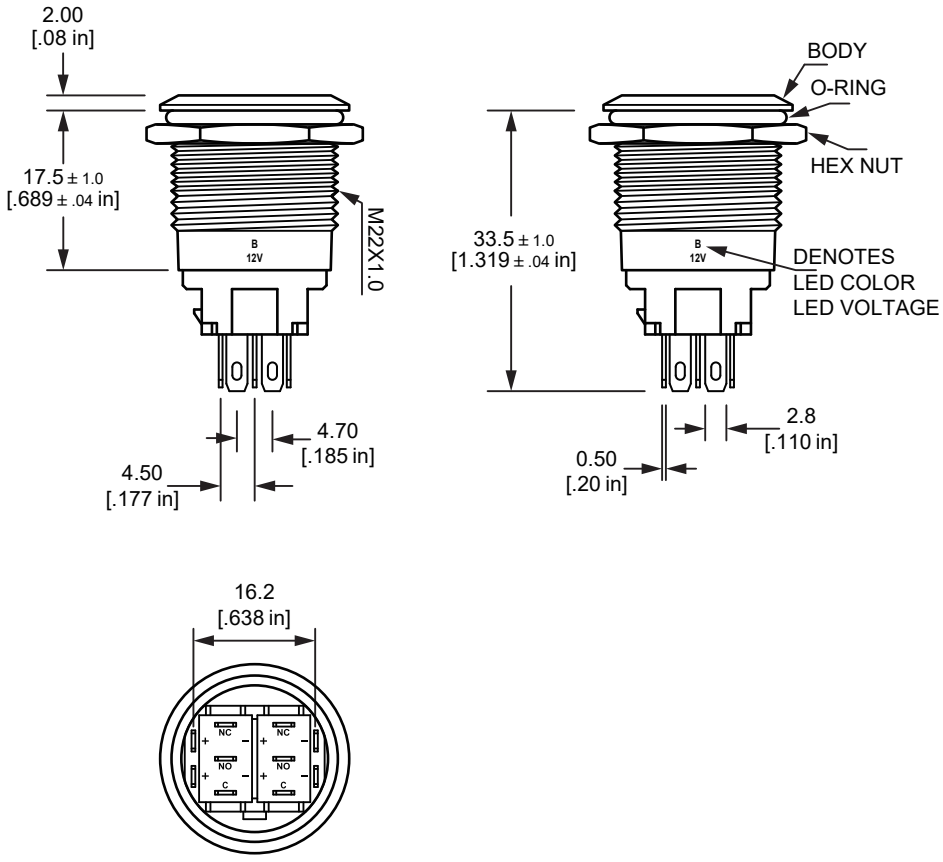
2.00
[.08 in]
17.5 ± 1.0
[.689 ± .04 in]
M22X1.0
B
12V
4.70
[.185 in]
4.50
[.177 in]
BODY
O-RING
HEX NUT
33.5 ± 1.0
[1.319 ± .04 in]
DENOTES
LED COLOR
LED VOLTAGE
2.8
[.110 in]
0.50
[.20 in]
16.2
[.638 in]
NC
NO
C

RoHS COMPLIANCE

Rear mounting anti vandal switch Ø22mm

Applications / Markets

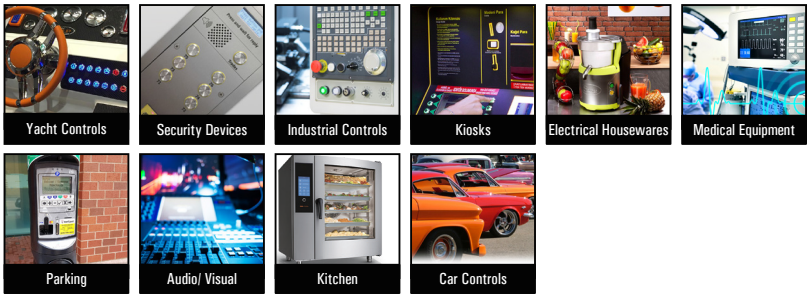

Description

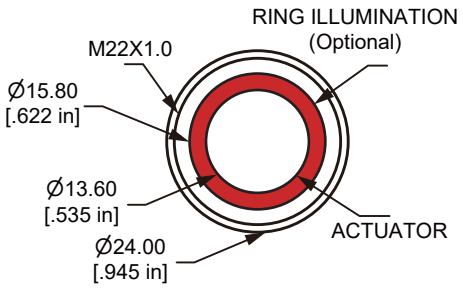

Order Code

Series	Actuator Options	Terminal Options	Function Options	Material Options	Illumination Style Options	Led-Color Options	Illumination Voltage Options		Graphic Options
L220 Rear mounting for flush version	F- Flat	NONE- Solder-lug (2.8x0.5) N- Screw	M- Momentary 1- 1NO	S- Stainless steel	D- Dot illum. R- Ring illum. NONE- non-illum.	W- White Y- Yellow B- Blue G- Green R- Red	NONE- Base voltage* 3.3V 6V 12V 24V 36V	–	NONE- Non-marking LE- Laser etched

NOTES:
* Base voltage on LEDs:
1.8V @ 20mA for Red and Yellow LED colors
2.8V @ 20mA for Blue, Green and White LED colors

Technical Data

Type	L220-F
Illuminated Options	Non-Illuminated\ Ring Illuminated\ Dot Illuminated
Terminal	Screw and Solder lug (2.8X0.8)
Max. Switch Rating	50mA 24VDC
Contact Resistance	≤100mΩ
Insulation Resistance	≥1000mΩ
Dielectric Strength	2000VAC
Operation Temp	-20℃ ～+55℃
Mechanical Life	1,000,000 Cycles
Electrical Life	50,000 Cycles
Contact Material	Silver Alloy
Rear Nut Fixing Torque	0.57Nm
Operation Pressure	approx. 8N
Protection	IP65/ IK09
Material	
Switch Assembly	UL94V-0 Rated Polyamide (Nylon)
Tags	Copper Alloy
Terminals	Copper Alloy
Switch Body & Button	Stainless steel
Lens and Lens Body	Polycarbonate
Internal Seal	Silicone
O Ring	Nitrile
Color	LED
	3.3V/ 6V/ 12V/ 24V/ 36V
	R G Y B W
	Approx, 40,000 hours

Panel Cutout

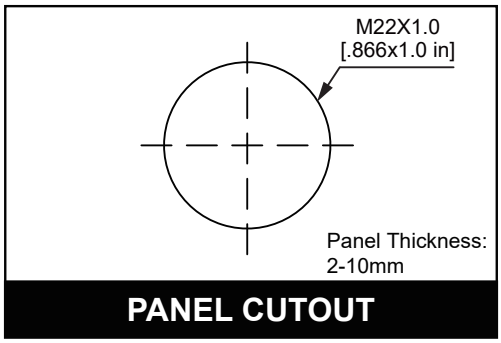

Screw Terminal

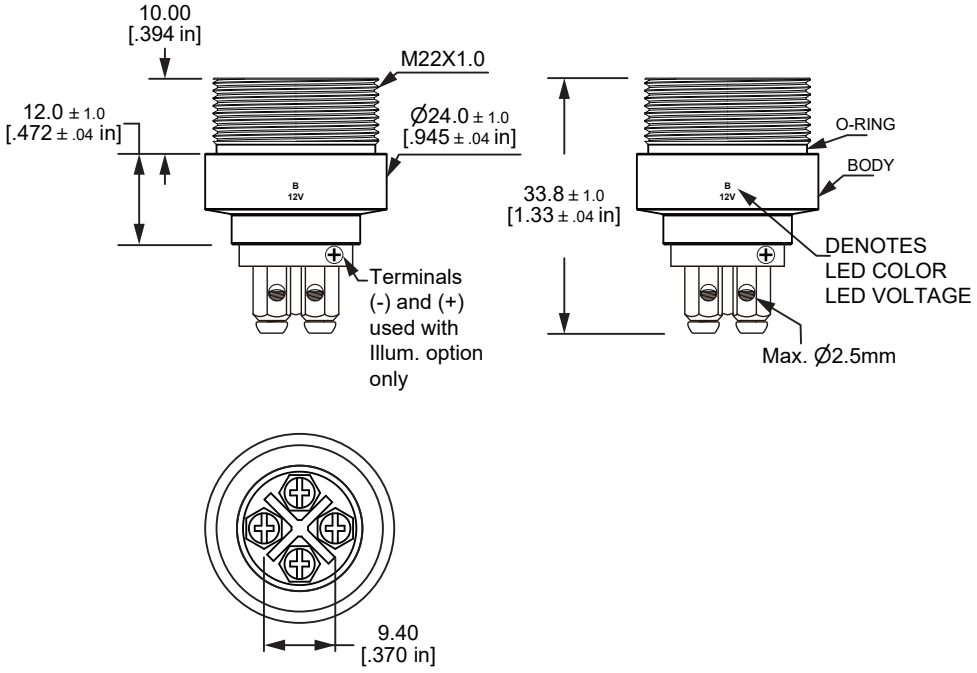

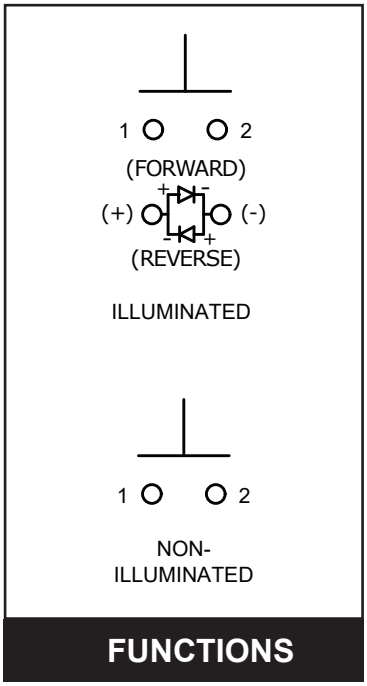

FUNCTIONS

Solder Terminal

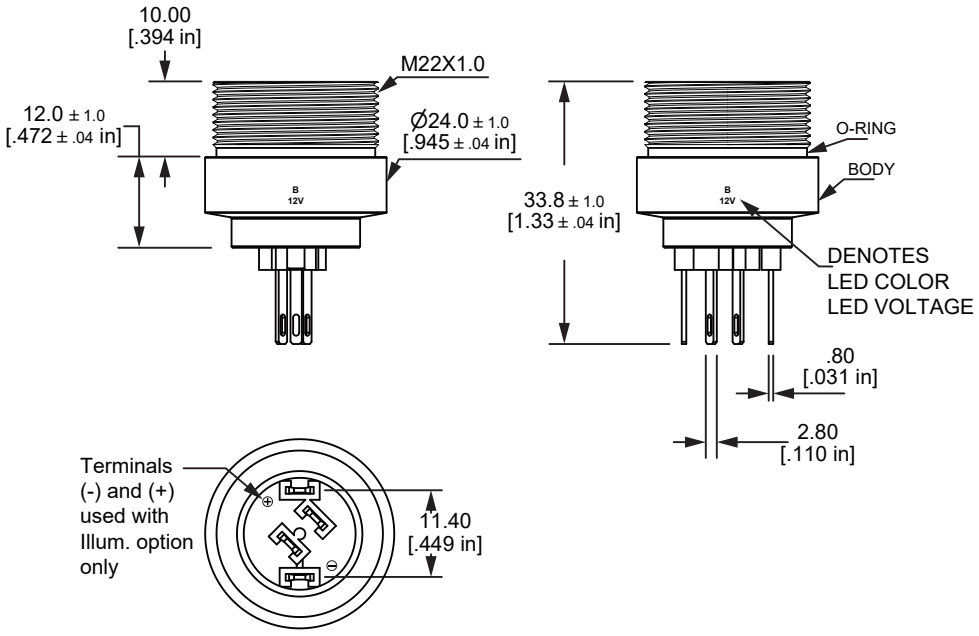

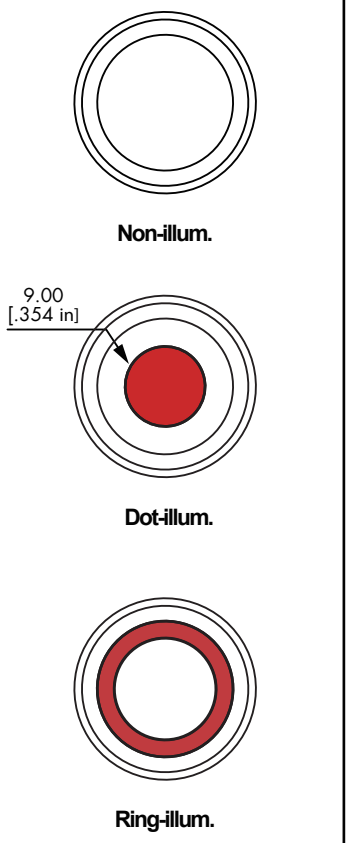

LENS OPTIONS

RoHS COMPLIANCE

Backlit LED switch Label Kit

When the Dual color LED function switches are turned on, the Blue LED lights up through the actuator. Activate a particular function by pressing one of the switches. This will change the Blue LED to Red, indicating that the chosen function is turned on. The switch color can customization.

With a IP67 waterproof rating and Stainless Steel body our switch can be installed on your boat or other vehicle in wet and dusty environments, but not under water. The first switch can be designated as the night time Blue LED On/Off switch.

Identifying the function of each push button switch is simple with our **interchangeable 3M adhesive backed actuator Backlit Labels. It's the only actuator that allows the LEDs in the switch body to pass light through the label.** The result is excellent visibility at night. There are **53 Switch Function Icons to choose from! Custom Icon Labels can be made to your design specifications.** Please check with the factory.

Backlit Label
in ***Daytime Mode***.
LED light is off.

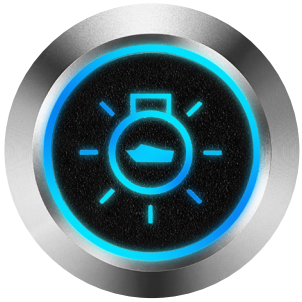

Backlit Label
in ***Nighttime Mode***.
The Blue LED provides great visibility of all the function switches and lets you know that the switches are in the off position.

Backlit Label
in ***Nighttime Mode.***
The Red LED lets you know that the switch is on.

*All specifications are subject to change without notice.

Backlit LED switch Label Kit

How to order

Series	Material Options	Switch Options	Icon Options
BL	**NONE**- PVC **U**- PU Dome	**16**- 16mm switch **19**- 19mm switch **22**- 22mm switch **25**- 25mm switch	**5**- 5 Icon labels included **50**- 50 Icon labels included **L450** 1 Icon label (check list)

Features & Benefits

- Scratch resistant polycarbonate material
- Back printed for durability
- Waterproof adhesive for longevity in wet environments
- Custom Icon Labels can be made to your design specifications
  Please check with the factory.

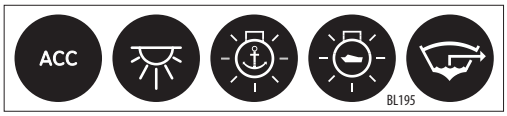

5 ICON labels included

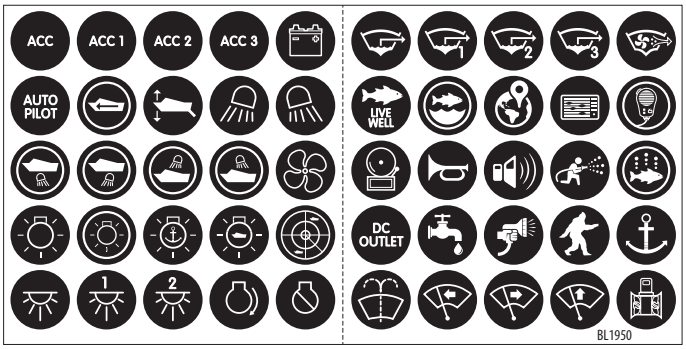

50 ICON labels included

Backlit Labels
Icon & Part Number Legend

Icon Style	Part No.
	L450-0001
	L450-0002
	L450-0003
	L450-0004
RAW	L450-0005
FRESH	L450-0006
ACC	L450-0007
	L450-0008
LIVE WELL	L450-0009
	L450-0010
NAV	L450-0011
ANCH	L450-0012
COURT	L450-0013
ARCH	L450-0014

Icon Style	Part No.
DOCK	L450-0015
U W	L450-0016
ACC	L450-0017
BILGE	L450-0018
HORN	L450-0019
BLOWER	L450-0020
WIPER	L450-0021
	L450-0022
	L450-0023
	L450-0024
	L450-0025
DIMMER	L450-0026
DIMMER	L450-0027
HATCH	L450-0028

Icon Style	Part No.
HATCH	L450-0029
AFT BILGE	L450-0030
FRESH WATER	L450-0031
FISHBOX PUMP	L450-0032
SPREADER	L450-0033
TRIM TABS	L450-0034
LIVEWELL	L450-0035
LIVEWELL	L450-0036
MAP-WHT	L450-0037
MAP-BLU	L450-0038
SUB FLOOR	L450-0039
SHADE IN	L450-0040
SHADE OUT	L450-0041
WASHDOWN	L450-0042

Icon Style	Part No.
SEAT FWD	L450-0043
SEAT BACK	L450-0044
ELECT	L450-0045
TOILET ADD WATER	L450-0046
TOILET FLUSH	L450-0047
FWD BILGE	L450-0048
HEAD	L450-0049
CABIN	L450-0050
	L450-0051
NAV ANCH	L450-0052
NAV ANCH	L450-0053

langir®

Switch on New Possibllites

Customized Service

ⓒCopyright Langir Electric All Right Reserved.
Disclaimer: The appearance of the products listed on this catalogue, color, parameters are for reference only, issued a kind of Langir Electric Company shall prevail.
Langir Electric Company reserves the right to modify or cancel the relevant parameters of this catalogue does not advance notice. If in doubt, please contact your sales representative.

YUEQING LANGIR ELECTRIC CO., LTD.
ADD: 4F, NO. 188 LIUQING NORTH RD, LIUSHI, YUEQING, ZHEJIANG, CHINA 325604
FAX: 86 (577) 62737671
TEL: 86 (577) 62737672 62737670
MAIL: langir@langir.com
Http://www.langir.com